9 Wiring diagrams

9 - 1 Wiring Diagrams - Single Phase

9

ERGA04-08EV
ERGA04-08EVA

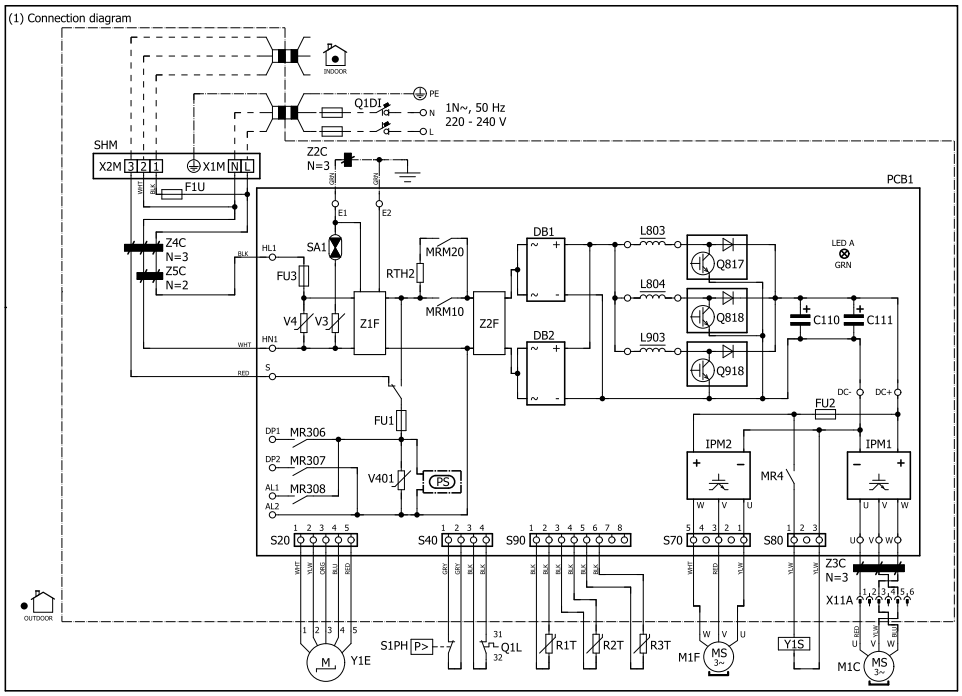

(3) Legend

: Field supply
* : Optional

Part n°		Description
AL*		Connector
C*		Capacitor
DB*		Rectifier bridge
DC*		Connector
DP*		Connector
E*		Connector
F1U		Fuse T 6,3 A 250 V
FU1, FU2		Fuse T 3,15 A 250 V
FU3		Fuse T 30 A 250 V
H*		Connector
IPM*		Intelligent power module
L		Connector
LED A		Pilot lamp
L*		Reactor
M1C		Compressor motor
M1F		Fan motor
MR*		Magnetic relay
N		Connector
PCB1		Printed circuit board (main)
PS		Switching power supply
Q1L		Thermal protector
Q1DI	#	Earth leakage circuit breaker
Q*		Insulated gate bipolar transistor (IGBT)
R1T		Thermistor (air)
R2T		Thermistor (heat exchanger)
R3T		Thermistor (discharge)
RTH2		Resistor
S		Connector
S1PH		High pressure switch
S2~80		Connector
SA1		Surge arrestor
SHM		Terminal strip fixed plate
U, V, W		Connector
V3, V4, V401		Varistor
X*A		Connector
X*M		Terminal strip
Y1E		Electronic expansion valve
Y1S		Solenoid valve (4-way valve)
Z*C		Noise filter (ferrite core)
Z*F		Noise filter

(2) Notes

: Connection
X1M : Main terminal
: Earth wiring
: Field supply
: Option
: switch box
: PCB
: Wiring depending on model
: Protective earth
: Field wire

NOTES:
1. When operating, do not short-circuit protection device(s) S1PH and Q1L.
2. Refer to the combination table and the option manual for how to connect the wiring to X6A, X28A and X77A.
3. Colours: BLK:black; RED:red; BLU:blue; WHT:white; GRN:green; YLW:yellow

4D130218