10 Wiring diagrams

10 - 1 Wiring Diagrams - Three Phase

RZAG-MY1, RZASG-MY1, AZAS-MY1

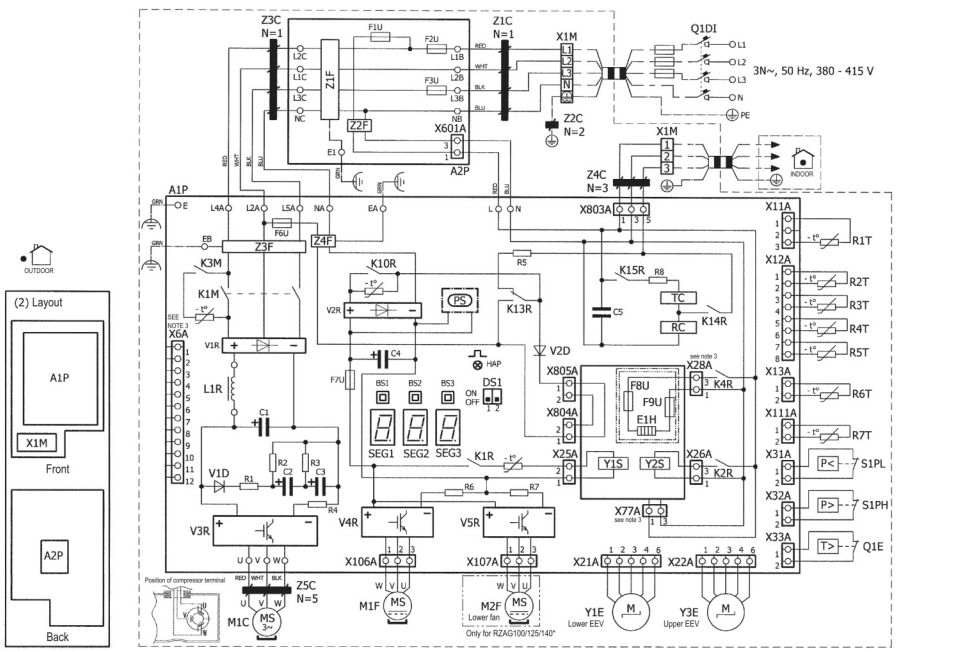

LEGEND

: Field supply
* Optional

Part n°		Description
A1P		Printed circuit board (main)
A2P		Printed circuit board (noise filter)
BS1~BS3 (A1P)		Push-button switch
C1~C5 (A1P)		Capacitor
DS1 (A1P)		Dipswitch
E1H	*	Bottom plate heater
F1U (A2P)		Fuse T 6,3 A 250 V
F2U, F3U (A2P)		Fuse T 30 A 500 V
F6U (A1P)		Fuse T 6,3 A 250 V
F7U (A1P)		Fuse T 5 A 250 V
F8U, F9U		Fuse T 1 A 250 V
HAP (A1P)		Light-emitting diode (service monitor is green)
K1M, K3M (A1P)		Magnetic contactor
K1R (A1P)		Magnetic relay (Y1S)
K2R (A1P)		Magnetic relay (Y2S)
K4R (A1P)		Magnetic relay (E1H)
K10R K13R~K15R (A1P)		Magnetic relay
L1R		Reactor
M1C		Compressor motor
M1F, M2F		Fan motor
PS (A1P)		Switching power supply
Q1DI		Earth leakage circuit breaker (30mA)
Q1E		Overload protection
R1~R8 (A1P)		Resistor
R1T		Thermistor (air)
R2T		Thermistor (discharge)
R3T		Thermistor (suction)
R4T		Thermistor (heat exchanger)
R5T		Thermistor (heat exchanger middle)
R6T		Thermistor (liquid)
R7T		Thermistor (fin)
RC (A1P)		Signal receiver circuit
S1PH		High pressure switch
S1PL		Low pressure switch
SEG1~SEG3 (A1P)		7-segment display
TC (A1P)		Signal transmission circuit
V1D, V2D (A1P)		Diode
V1R, V2R (A1P)		Diode module
V3R~V5R (A1P)		IGBT power module
X1M		Terminal strip
Y1E, Y3E		Electronic expansion valve
Y1S, Y2S		Solenoid valve (4-way valve)
Z1C~Z5C		Noise filter (ferrite core)
Z1F~Z4F (A1P~A2P)		Noise filter
L*A, L*B, NA, NBE*, U, V, W, X*A (A1P, A2P)		Connector

NOTES

1. Refer to the wiring diagram sticker (on the back of the front plate) for how to use the BSI~BS3 and DS1 switches.
2. When operating, do not short-circuit protection device(s) S1PH, S1PL and Q1E.
3. Refer to the combination table and the option manual for how to connect the wiring to X6A, X28A and X77A.
4. Colours: BLK: Black, RED: Red, BLU: Blue, WHT: White, GRN: Green.

4D109448