9 Wiring diagrams

9 - 1 Wiring Diagrams - Single Phase

RZAG-B

Wiring diagram

Field wiring

BLK	: Black
BLU	: Blue
BRN	: Brown
GRN	: Green
GRY	: Grey
ORG	: Orange
YLW	: Yellow
RED	: Red

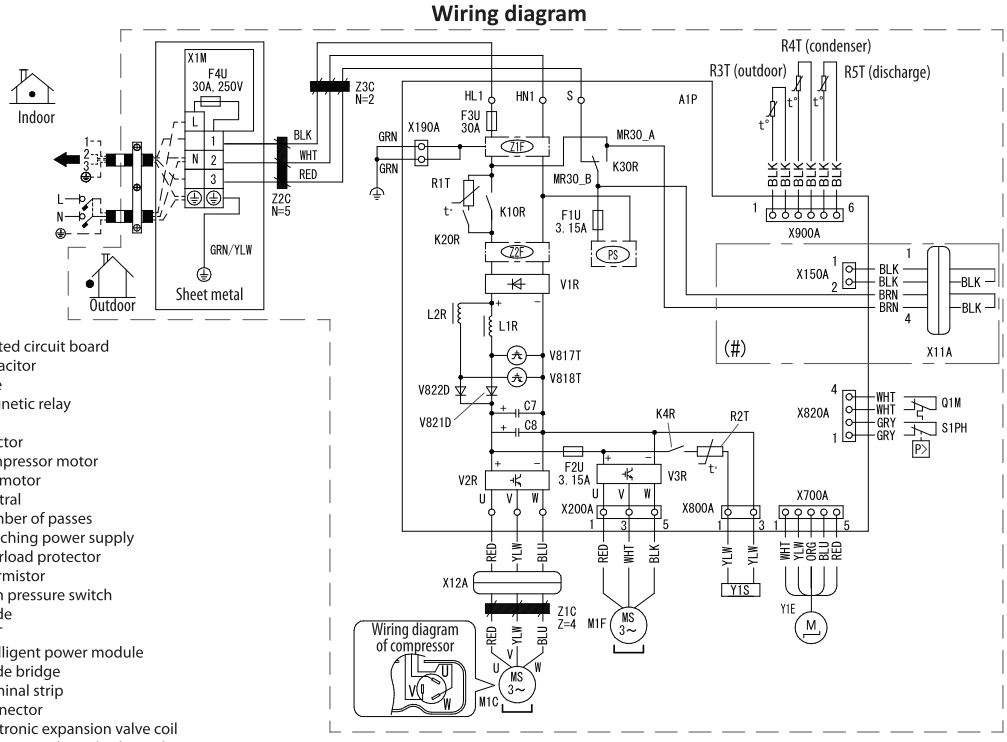

A1P	Printed circuit board
C7,C8	Capacitor
F1U, F2U, F3U, F4U	Fuse
K4R, K10R, K20R, K30R	Magnetic relay
L	Live
L1R,L2R	Reactor
M1C	Compressor motor
M1F	Fan motor
N	Neutral
N=2,N=4,N=5	Number of passes
PS	Switching power supply
Q1M	Overload protector
R1T~R5T	Thermistor
S1PH	High pressure switch
V821D, V822D	Diode
V817T, V818T	IGBT
V2R, V3R	Intelligent power module
V1R	Diode bridge
X1M	Terminal strip
X1A~X900A	Connector
Y1E	Electronic expansion valve coil
Y1S	Reversing solenoid valve coil
Z1C, Z2C, Z3C	Ferrite core
Z1F, Z2F	Noise filter
⏚	Protective earth
⏚	Noiseless earth

NOTES

1. Refer to the nameplate for the power requirements.
2. Do not remove or replace fuse when the units are energized.
3. (#) Only for the units with the suspend connector specified in the installation manual.

3D150217