10 Wiring diagrams

10 - 1 Wiring Diagrams - Single Phase

RZAG125-140NV1

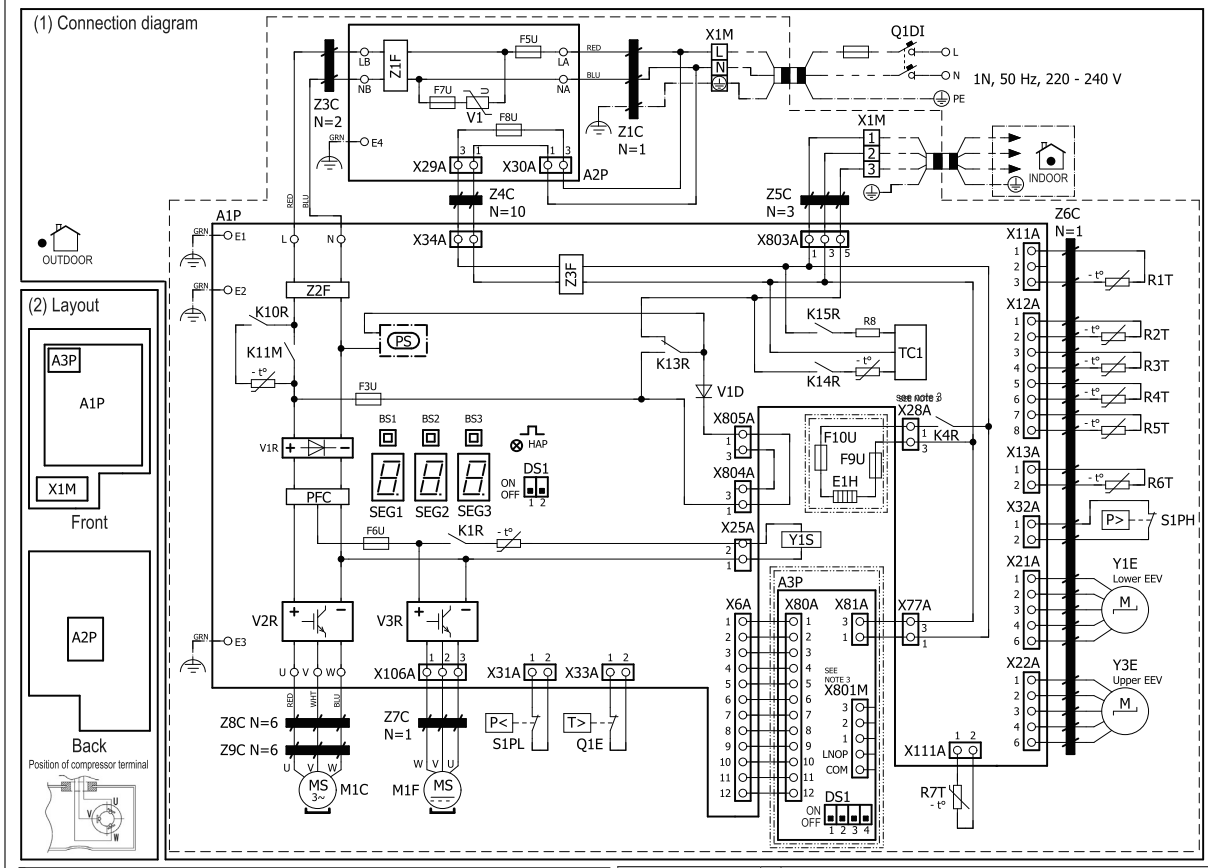

(3) NOTES

	: Connection		: switch box
X1M	: Main terminal		: PCB
	: Earth wiring		: Wiring depending on model
	: Field supply		: Protective earth
	: Option		: Field wire

(4) LEGEND

Part n°		Description
A1P		Printed circuit board (main)
A2P		Printed circuit board (noise filter)
A3P	*	Printed circuit board (demand)
BS1~3 (A1P)		Push-button switch
DS1(A1P,A3P)		Dipswitch
E1~3 (A1~2P)		Connector
E1H	*	Bottom plate heater
F3U (A1P)		Fuse T 6,3 A 250 V
F5U (A2P)		Fuse T 56 A 250V
F6U (A1P)		Fuse T 5 A 250V
F7U (A2P)		Fuse T 6,3 A 250 V
F8U (A2P)		Fuse T 6,3 A 250 V
F9~10U		Fuse F 1 A 250 V
HAP (A1P)		Light-emitting diode (service monitor is green)
K1R (A1P)		Magnetic relay (Y1S)
K4R (A1P)		Magnetic relay (E1H)
K13~15R, K10R (A1P)		Magnetic relay
K11M (A1P)		Magnetic contactor
L* (A1~2P)		Connector
M1C		Compressor motor
M1F		Fan motor
PFC (A1P)		Power factor correction

Part n°		Description
PS (A1P)		Switching power supply
Q1DI		Earth leakage circuit breaker (30mA)
Q1E		Overload protection
R1T		Thermistor (air)
R2T		Thermistor (discharge)
R3T		Thermistor (suction)
R4T		Thermistor (heat exchanger)
R5T		Thermistor (heat exchanger middle)
R6T		Thermistor (liquid)
R7T		Thermistor (fin)
R8 (A1P)		Resistor
S1PH		High pressure switch
S1PL		Low pressure switch
SEG1~3 (A1P)		7-segment display
TC1 (A1P)		Signal transceiver circuit
U, V, W (A1P)		Connector
V1 (A2P)		Varistor
V1D (A1P)		Diode
V*R (A1P)		Diode module
X*A (A1~2P)		Connector
X1M		Terminal strip
Y1E, Y3E		Electronic expansion valve
Y1S		Solenoid valve (4-way valve)
Z*C		Noise filter (ferrite core)
Z*F (A1~2P)		Noise filter

* : optional
\# : field supply

NOTES

1. Refer to the wiring diagram sticker (on the back of the front plate) for how to use the BS1~BS3 and DS1 switches.
2. When operating, do not short-circuit protection device(s) S1PH, S1PL and Q1E.
3. Refer to the combination table and the option manual for how to connect the wiring to X28A and X801M.
4. Colours: BLK:black; RED:red; BLU:blue; WHT:white; GRN:green

4D120910