8 Wiring diagrams

8 - 1 Wiring Diagrams - Single Phase

RXZ-N

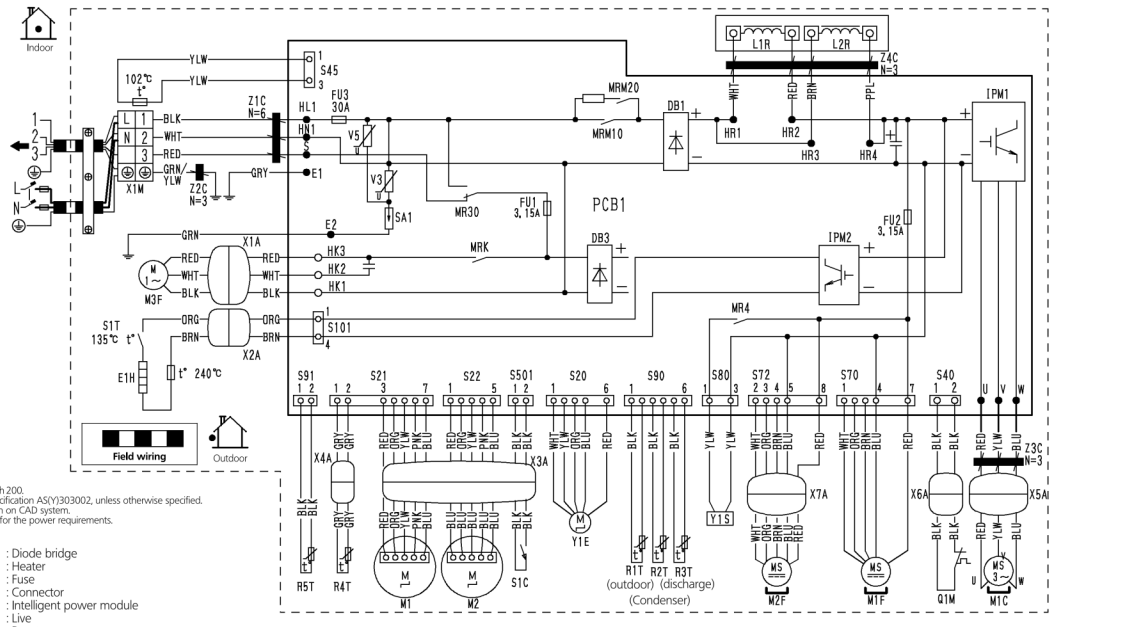

Notes
1. Size: Length 145 X Width 200.
2. Refer to purchasing specification AS(Y)303002, unless otherwise specified.
3. This drawing was drawn on CAD system.
4. Refer to the nameplate for the power requirements.

DB1,DB3	: Diode bridge
E1H	: Heater
FU1,FU2,FU3	: Fuse
HK1,HK2,HK3	: Connector
IPM1,IPM2	: Intelligent power module
L	: Live
L1R,L2R	: Reactor
MRK,MR4,MRM10, MRM20	: Magnetic relay
M1	: Humidifying rotor motor
M2	: Damper motor
M1C	: Compressor motor
M1F	: Fan motor
M2F	: Humidifier fan motor
M3F	: Hygroscopic fan motor
N	: Neutral
PCB1	: Printed circuit board
Q1M	: Overload protector
R1T,R2T,R3T	: Thermistor
R4T	: Humidification thermistor
R5T	: Liquid pipe thermistor
SA1	: Surge arrester
S1C	: Limit switch
S1T	: Thermostat
V3,V5	: Varistor
X1A,X2A,X3A X4A,X5A,X6A,X7A	: Connector
X1M	: Terminal strip
Y1E	: Electronic expansion valve coil
Y1S	: Reversing solenoide valve coil
Z1C,Z2C,Z3C,Z4C	: Ferrite core
⏚	: Protective earth

3D082027A