9 Wiring diagrams

9 - 1 Wiring Diagrams - Three Phase

RXYSA8A

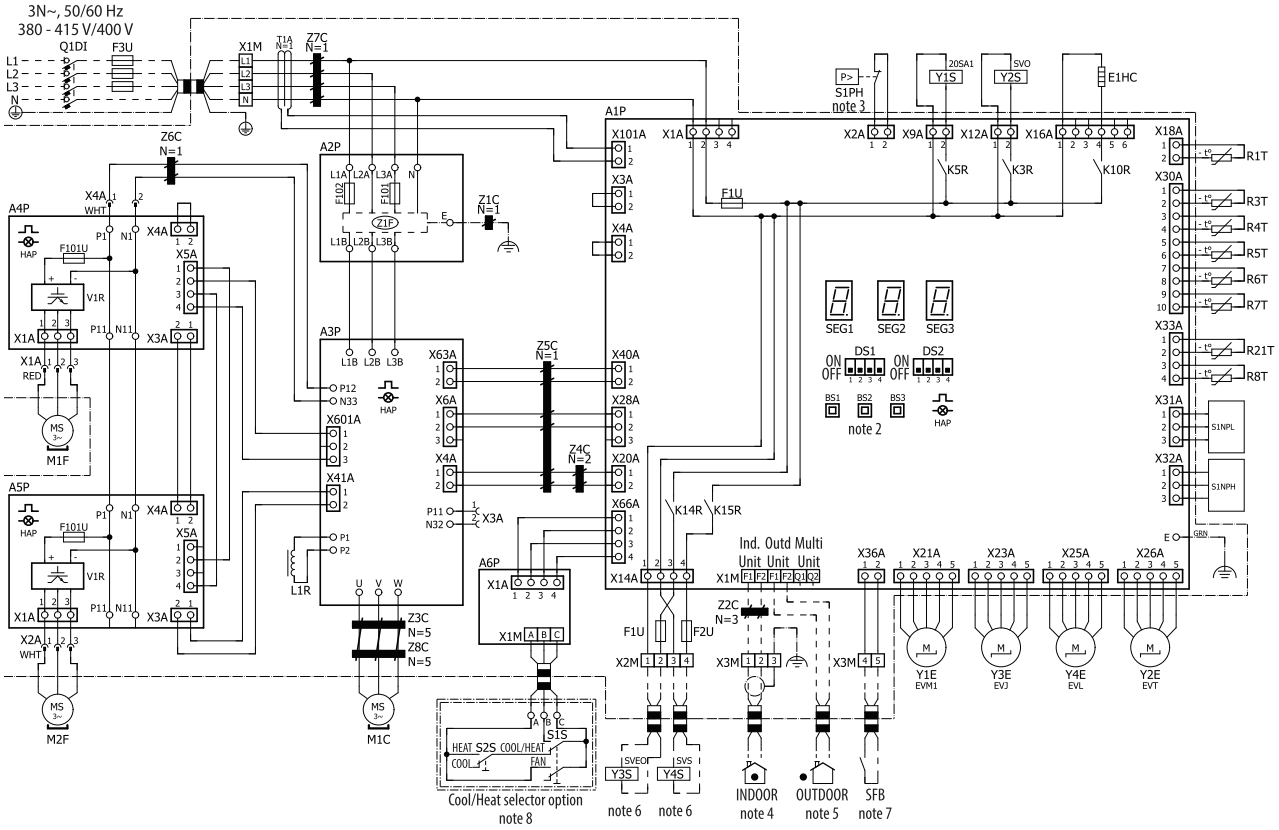

NOTES to go through before starting the unit

1. Symbols:

X1M	: Main terminal		: Option
	: Earth wiring		: Wiring depending on model
	: Field wire		: Not mounted in switch box
	: Field cable		: PCB
	: Screened conductor		
(1)	: Several wiring possibilities		

2. Refer to the installation or service manual on how to use BS1 ~ BS3 push buttons and DS1 ~ DS2 DIP switches.
3. Do not operate the unit by short-circuiting protection device S1PH.
4. Refer to the installation manual for indoor-outdoor transmission F1-F2 wiring.
5. When using the central control system, connect outdoor-outdoor transmission F1-F2.
6. The capacity of the contact is 220~240V AC - 0,5A (Rush current needs 3A or less).
7. Use dry contact for micro-current (10mA or less, 15V DC).
8. When using the optional adapter, refer to the installation manual of the optional adapter.

LAYOUT OF M1C, M1F, M2F

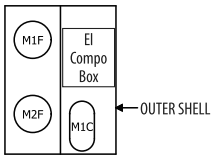

TERMINAL OF M1C

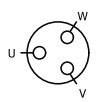

POSITION IN SWITCH BOX

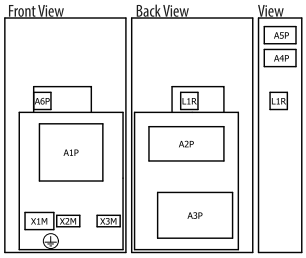

LEGEND

Part n°		Description
A1P		Printed circuit board (main)
A2P		Printed circuit board (noise filter)
A3P		Printed circuit board (inverter)
A4P, A5P		Printed circuit board (fan)
A6P		Printed circuit board (Cool/Heat Selector)
BS* (A1P)		Push button switch
DS* (A1P)		Dipswitch
E1HC		Crank case heater
E3H		Bottom plate heater
F1U (A1P)		Fuse T 10 A 250 V
F1U, F2U		Fuse T 1 A 250 V
F101U (A5P)		Fuse
F101U (A4P)		Fuse
F101 (A2P)		Fuse
F102 (A2P)		Fuse
F3U	#	Field fuse
HAP (A*P)		Running LED (service monitor-green)
K*R (A*P)		Relay on PCB
L1R		Reactor
M1C		Motor (compressor)
M1F, M2F		Motor (fan)
Q1DI	#	Earth leakage circuit breaker
R1T		Thermistor (Air)
R3T		Thermistor (Suction Accumulator)
R4T		Thermistor (Heat exch. liquid)
R5T		Thermistor (Liquid)
R6T		Thermistor (Subcool heat exch. gas)
R7T		Thermistor (De-icer)

Part n°		Description
R8T		Thermistor (M1C body)
R21T		Thermistor (M1C discharge pipe)
S1NPH		High pressure sensor
S1NPL		Low pressure sensor
S1PH		High pressure switch
S1S	*	Air control switch
S2S	*	Cool / Heat switch
SEG* (A1P)		7-segment display
SFB	#	Mechanical ventilation error input
T1A		Current sensor
V1R (A4P)		Power module
V1R (A5P)		Power module
X*A		Connector
X*M		Terminal strip
Y1E		Electronic exp. valve (Heat exch.)
Y2E		Electronic exp. valve (Subc. heat exch.)
Y3E		Electronic exp. valve (Inverter cooling)
Y4E		Electronic exp. valve (Liquid injection)
Y1S		Solenoïd valve (4-Way valve)
Y2S		Solenoïd valve (Accu oil return)
Y3S	#	Error operation output (SVEO)
Y4S	#	Leak sensor output (SVS)
Z*C		Noise filter (ferrite core)
Z1F (A2P)		Noise filter (with surge absorber)

* : optional #: field supply