8 Wiring diagrams

8 - 1 Wiring Diagrams - Single Phase

8

RXJ20-35A

Wiring diagram

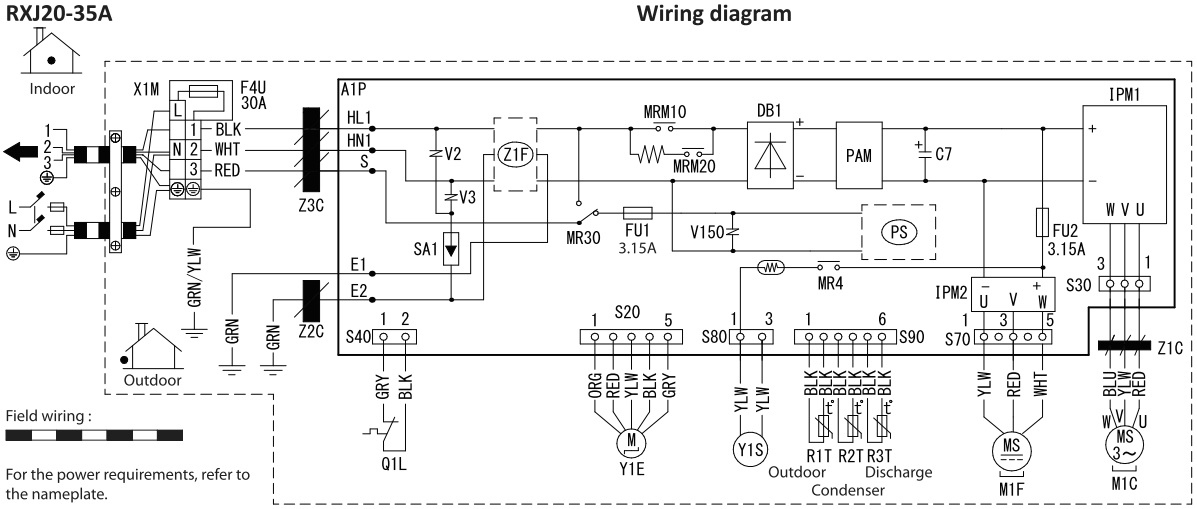

Wire colors

BLK	: Black
WHT	: White
BRN	: Brown
RED	: Red
GRN	: Green
YLW	: Yellow
ORG	: Orange
BLU	: Blue
GRU	: Grey

C7	Capacitor
DB1	Diode bridge
IPM1, IPM2	Intelligent power module
L	Live
M1C	Compressor motor
M1F	Fan motor
N	Neutral
PAM	Pulse-amplitude modulation
A1P	Printed circuit board
PS	Switching power supply
Q1L	Overload protector
SA1	Surge arrester
X1M	Terminal strip

Y1E	Electronic expansion valve coil
Y1S	Reversing solenoid valve coil
FU1, FU2, F4U	Fuse
MR4, MR30, MRM10, MRM20	Magnetic relay
R1T, R2T, R3T	Thermistor
S20, S30, S40, S70, S80, S90	Connector
V2, V3, V150	Varistor
Z1C, Z2C, Z3C	Ferrite core
Z1F	Noise filter
⊕	Protective earth
⏚	Earth

4D138379

RXJ42-50A

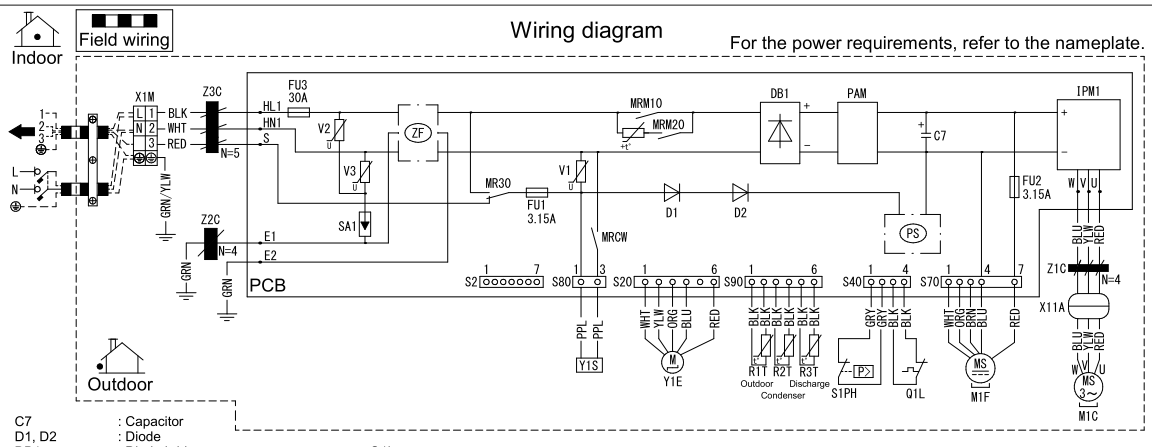

C7	: Capacitor
D1, D2	: Diode
DB1	: Diode bridge
E1, E2, HL1, HN1,S, U, V, W	: Connection
FU1, FU2, FU3	: Fuse
IPM1	: Intelligent power module
L	: Live
M1C	: Compressor motor
M1F	: Fan motor
MR30, MRCW, MRM10, MRM20	: Magnetic relay
N	: Neutral
N=4, N=5	: Number of passes
PAM	: Pulse-amplitude modulation
PCB	: Printed circuit board
PS	: Switching power supply

Q1L	: Overload protector
R1T, R2T, R3T	: Thermistor
S1PH	: High pressure switch
S2, S20, S40, S70, S80, S90	: Terminal connector
SA1	: Surge arrestor
V1, V2, V3	: Varistor
X11A	: Connector
X1M	: Terminal strip
Y1E	: Electronic expansion valve coil
Y1S	: Reversing solenoid valve coil
Z1C, Z2C, Z3C	: Ferrite core
ZF	: Noise filter
⊕	: Earth
⏚	: Protective earth

BLK	: Black
BLU	: Blue
BRN	: Brown
GRN	: Green
GRY	: Grey
ORG	: Orange
RED	: Red
WHT	: White
YLW	: Yellow
PPL	: Purple

3D130905A