8 Wiring diagrams

8 - 1 Wiring Diagrams - Single Phase

RXA20-35A9
RXJ20-35M9

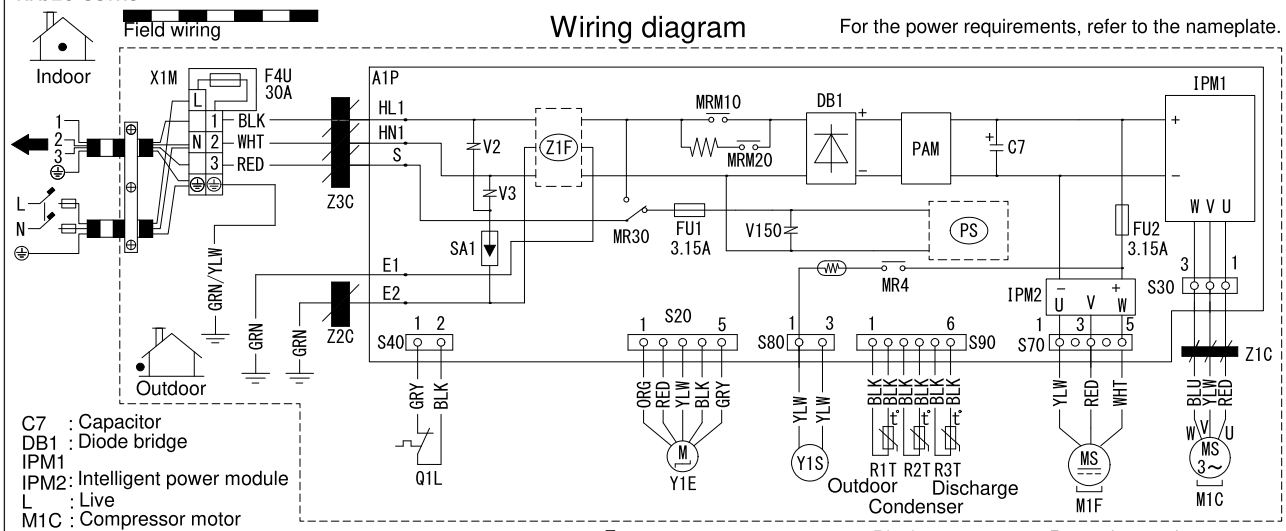

C7 : Capacitor
DB1 : Diode bridge
IPM1
IPM2: Intelligent power module
L : Live
M1C : Compressor motor
M1F : Fan motor
N : Neutral
PAM : Pulse-amplitude modulation
A1P : Printed circuit board
PS : Switching power supply
Q1L : Overload protector
SA1 : Surge arrestor
X1M : Terminal strip
Y1E : Electronic expansion valve coil
Y1S : Reversing solenoid valve coil

FU1,FU2,F4U : Fuse
MR4,MR30
MRM10,MRM20 : Magnetic relay
R1T,R2T,R3T : Thermistor
S20,S30,S40,S70
S80,S90,X11A : Connector
V2,V3,V150 : Varistor
Z1C,Z2C,Z3C : Ferrite core
Z1F : Noise filter

BLK : Black
WHT: White
RED : Red
GRN: Green
YLW : Yellow
ORG: Orange
BLU : Blue
GRY : Grey

⊕: Protective earth
⏚: Earth

Notes
1 Size: 140 x 80
2. Refer to purchasing specification AS303002, unless otherwise specified.

4D122750