# 9 Wiring diagrams

## 9 - 1 Wiring Diagrams - Single Phase

**FXUA-A**

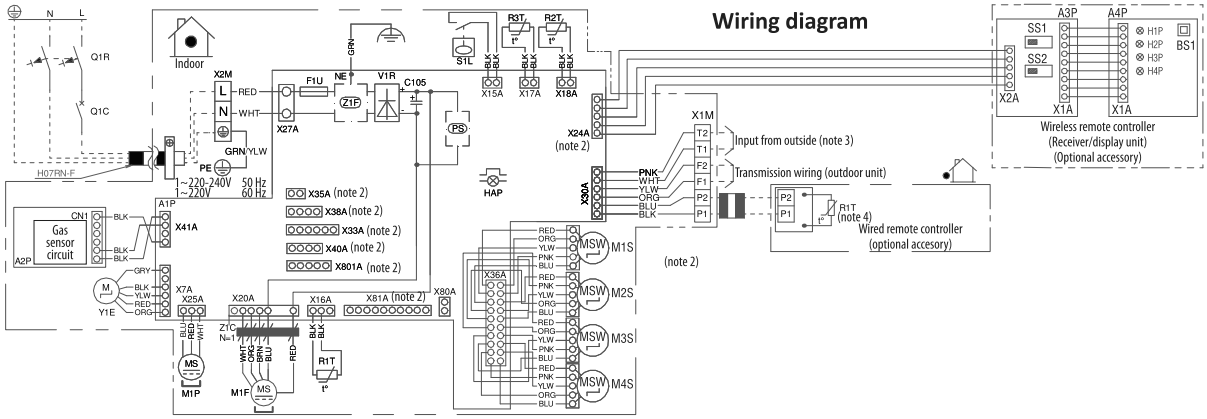


| Indoor unit | |
|---|---|
| A1P | Printed circuit board (main) |
| C105 | Capacitor |
| F1U | Fuse (T, 3.15A, 250V) |
| F2U | Fuse |
| HAP | Flashing lamp (Service monitor: green) |
| M1S-M4S | Motor (swing blade) |
| M1F | Motor (indoor fan) |
| M1P | Motor (drain pump) |
| R1T | Thermistor (air) |
| R2T, R3T | Thermistor (coil) |
| S1L | Float switch (drain pump) |
| V1R | Diode bridge |
| X7A-X801A | Connector |
| X1M | Terminal block (Remote controller) |
| X2M | Terminal block (Power supply) |
| Z1C | Ferrite core |
| Z1F | Noise filter |
| PS | Switching power supply |
| Y1E | Electronic expansion valve |
| Q1R | Residual current device |
| Q1C | Circuit breaker |
| NE | Noiseless earth |
| CN1 | Gas sensor connector |
| A2P | Printed circuit board (gas sensor) |
| Wired remote controller | |
| R1T | Thermistor (air) |
| Wireless remote controller | |
| A3P | Printed circuit board |
| A4P | Printed circuit board |
| BS1 | Push button switch (on/off) |
| H1P | Pilot lamp (on-red) |
| H2P | Pilot lamp (timer green) |
| H3P | Pilot lamp (filter sign-red) |
| H4P | Pilot lamp (defrost - orange) |
| SS1 | Selector switch (main/sub) |
| SS2 | Selector switch (Wireless address set) |

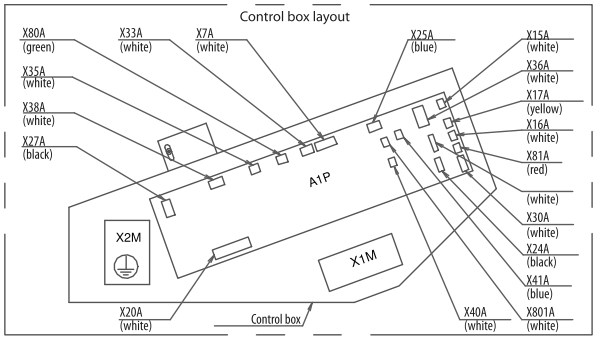


**NOTES**

1. ☐☐☐ : terminal block, ⊡⊡ : connector, ::▮▮:: : field wiring
2. X24A, X25A, X33A, X35A, X38A, X40A, X81A, X801A are (re) connected when optional accessories are being used, see wiring diagram of this accessory.
3. Can be used for fire alarm input only. See installation manual for more information.
4. In case of main/sub changeover, see the installation manual attached to remote controller.

**WIRE COLORS**

| | |
|---|---|
| BLK | : Black |
| BLU | : Blue |
| YLW | : Yellow |
| BRN | : Brown |
| ORG | : Orange |
| RED | : Red |
| WHT | : White |
| GRN | : Green |
| PNK | : Pink |
| GRY | : Grey |

**3D137577A**