7 Dimensional drawings

7 - 1 Dimensional Drawings

7

FXSQ63-80A

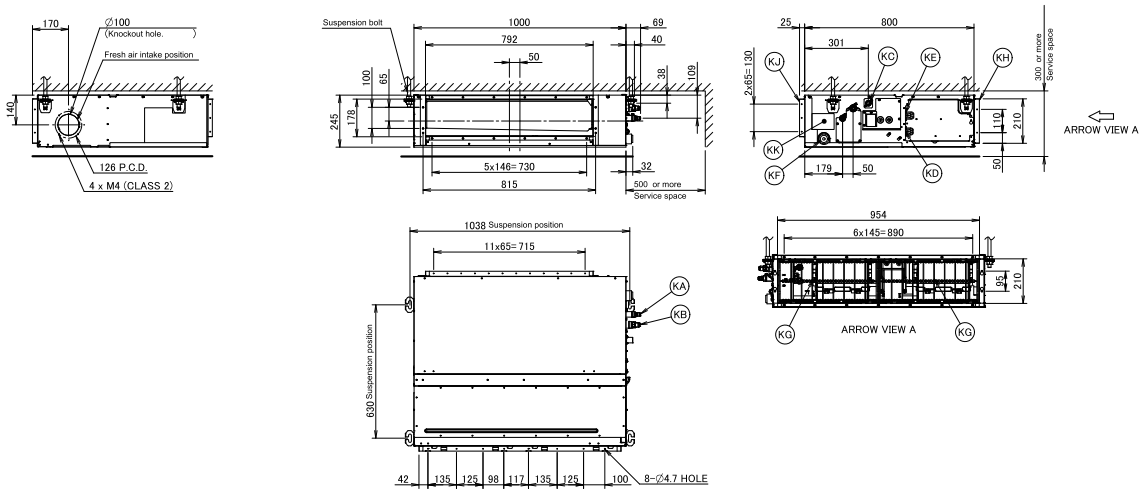

Item	Name	Description
KA	Liquid pipe connection port	Ø9.52 flared connection
KB	Gas pipe connection port	Ø15.90 flared connection
KC	Drain pipe connection	VP20 (OD Ø26, ID Ø20)
KD	Wiring connection	/
KE	Power supply connection	/
KF	Drain outlet	VP20 (OD Ø26, ID Ø20)
KG	Air filter	/
KH	Air suction side	/
KJ	Air discharge side	/
KK	Nameplate	/

Notes
1. When installing optional accessories, refer to their respective documentation.
2. The ceiling depth varies according to the documentation of the specific system.

3D094916A

FXSQ100-125A

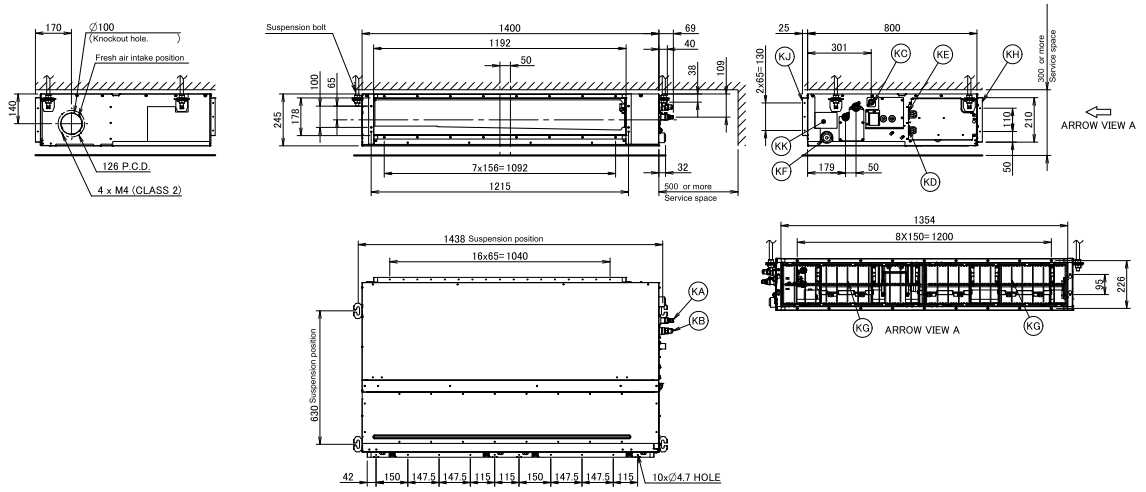

Item	Name	Description
KA	Liquid pipe connection port	Ø9.52 flared connection
KB	Gas pipe connection port	Ø15.90 flared connection
KC	Drain pipe connection	VP20 (OD Ø26, ID Ø20)
KD	Wiring connection	/
KE	Power supply connection	/
KF	Drain outlet	VP20 (OD Ø26, ID Ø20)
KG	Air filter	/
KH	Air suction side	/
KJ	Air discharge side	/
KK	Nameplate	/

Notes
1. When installing optional accessories, refer to their respective documentation.
2. The ceiling depth varies according to the documentation of the specific system.

3D094917A