9 Wiring diagrams

9 - 1 Wiring Diagrams - Single Phase

FXSN-B **Wiring diagram**

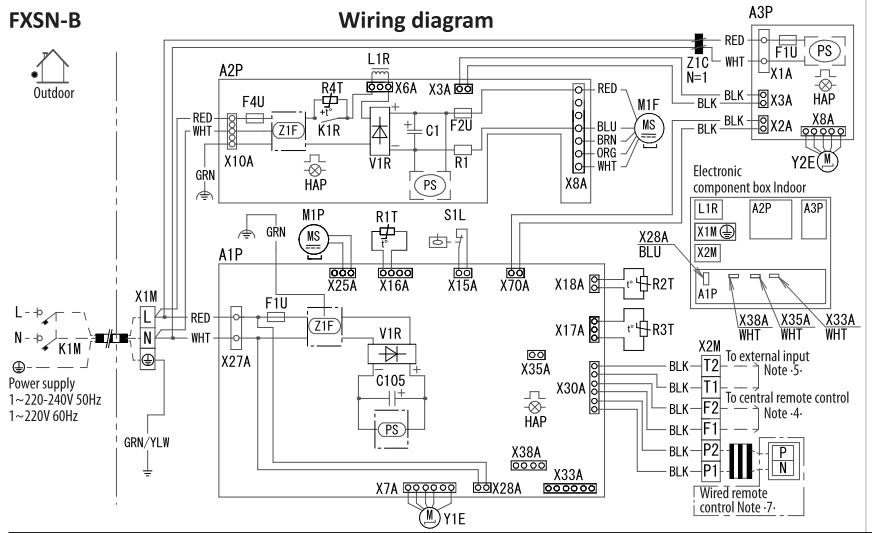

Indoor unit	
A1P	Printed circuit board
A2P	Printed circuit board (fan)
A3P	Printed circuit board (sub)
C1	Capacitor
C105	Capacitor
DS1	Selector switch
F1U	Fuse (T, 3.15A, 250V) (A1P)
F1U	Fuse (T, 3.15A, 250V) (A3P)
F2U	Fuse (T, 5A, 250V)
F4U	Fuse (T,6.3A,250V)
HAP	Indication lamps
K1M	Earth leakage breaker
K1R	Magnetic relay
L1R	Reactor
M1F	Motor (indoor fan)
M1P	Motor (drain pump)
R1	Resistor (current sensor)
R1T	Thermistor (suction)
R2T	Thermistor (liquid)
R3T	Thermistor (coil)
R4T	Thermistor (current limitation)
S1L	Float switch
V1R	Diode bridge
PS	Switching power supply
X1M	Terminal strip (power supply)
X2M	Terminal block (control)
Y1E	Electronic expansion valve coil (Cooling)
Y2E	Electronic expansion valve coil (Heating)
Z1C	Ferrite core
Z1F	Noise filter
Connector (optional accessories)	
X28A	Connector (power supply for wiring)
X33A	Connector (for wiring)
X35A	Connector (power supply for adaptor)
X38A	Connector (for wiring)

NOTES

1. ▭: screw terminal, ⊡: connector, ▮▮▮: field wiring
2. In case of a multi-indoor-unit system with parallel operation, refer to the documentation of the indoor units.
3. For details, refer to the wiring diagram attached to the outdoor unit.
4. When using a central remote control, connect it to the unit according to the installation manual.
5. When connecting the input wires from outside, forced OFF or On/OFF control operation can be selected by remote control. For more information, refer to the installation manual.
6. For a multi-indoor-unit system with parallel operation, the connection ratio (number of indoor units you can connect to the outdoor unit) is different.
   Before connecting, refer to the Technical data or the General catalogue.
7. For how to switch between the main unit and the sub units, refer to the installation manual of the remote control.

COLOURS

BLK	: Black	WHT	: White	BRN	: Brown
RED	: Red	GRN	: Green	ORG	: Orange
BLU	: Blue	YLW	: Yellow		

3D125065