7 Dimensional drawings

7 - 1 Dimensional Drawings

FXMQ-MB

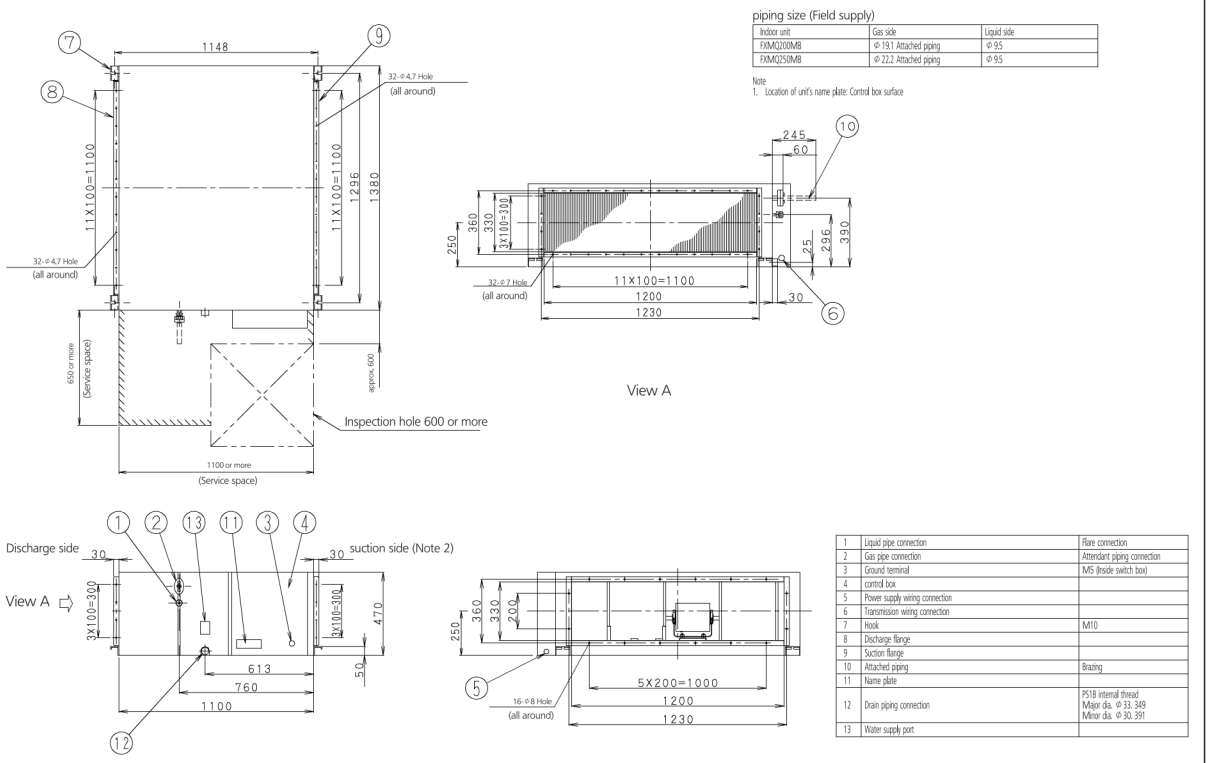

piping size (Field supply)

Indoor unit	Gas side	Liquid side
FXMQ200MB	φ 19.1 Attached piping	φ 9.5
FXMQ250MB	φ 22.2 Attached piping	φ 9.5

Note
1. Location of unit's name plate: Control box surface

1	Liquid pipe connection	Flare connection
2	Gas pipe connection	Attendant piping connection
3	Ground terminal	M5 (Inside switch box)
4	control box	
5	Power supply wiring connection	
6	Transmission wiring connection	
7	Hook	M10
8	Discharge flange	
9	Suction flange	
10	Attached piping	Brazing
11	Name plate	
12	Drain piping connection	PS1B (internal thread) Major dia. φ 33, 249 Minor dia. φ 30, 391
13	Water supply port	

3D096007