9 Wiring diagrams

9 - 1 Wiring Diagrams - Single Phase

FXMA50-125A
Wiring diagram

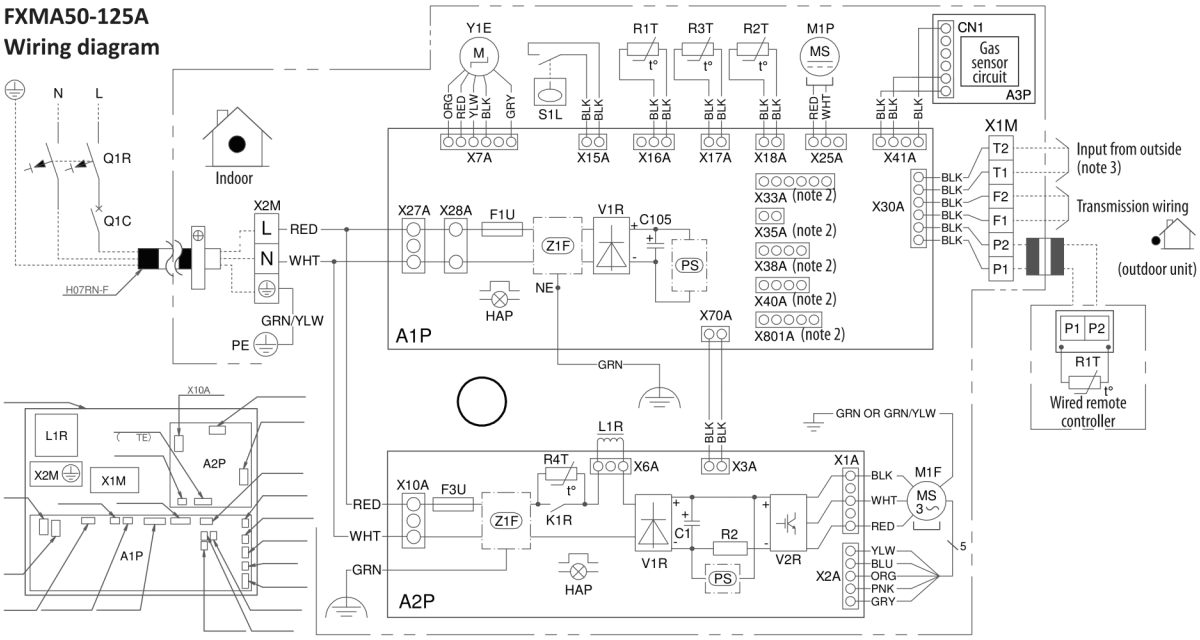

Indoor unit	
A1P	Printed circuit board (main)
A2P	Printed circuit board (fan)
C1	Capacitor
C105	Capacitor
CN1	Gas sensor connector
A3P	Printed circuit board (gas sensor)
F1U	Fuse (T, 3.15A, 250V)
F3U	Fuse (T, 6.3A, 250V)
HAP	Indication lamp
K1R	Magnetic relay
L1R	Reactor
M1F	Motor (indoor fan)
M1P	Motor (drain pump)
NE	Noiseless earth
Q1R	Residual current device
Q1C	Circuit breaker
R2	Resistor (current sensor)
R1T	Thermistor (air)
R2T	Thermistor (liquid)
R3T	Thermistor (coil)
R4T	Thermistor ntc (current limiting)
S1L	Float switch
V1R	Diode bridge
V2R	Power module
PS	Switching power supply
X1M	Terminal strip (control)
X2M	Terminal strip (power supply)
X1A - X801A	Connector
Y1E	Electronic expansion valve
Z1F	Noise filter
Wired remote controller	
R1T	Thermistor (air)

Control box layout

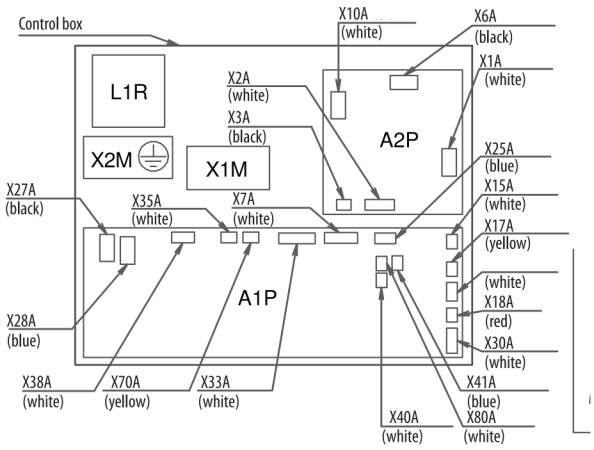

NOTES

1. ▭▭ : terminal block, ▭ : connector, ▬▬ : field wiring
2. X33A, X35A, X38A, X40A, X801A are connected when optional accessories are being used, see wiring diagram of this accessory.
3. Can be used for fire alarm input only.
   See installation manual for more information.

WIRE COLORS

BLK : Black
BLU : Blue
YLW : Yellow
BRN : Brown
ORG : Orange
RED : Red
WHT : White
GRN : Green
PNK : Pink
GRY : Grey

3D137857