9 Wiring diagrams

9 - 1 Wiring Diagrams - Single Phase

9

FXKA-A

Wiring diagram

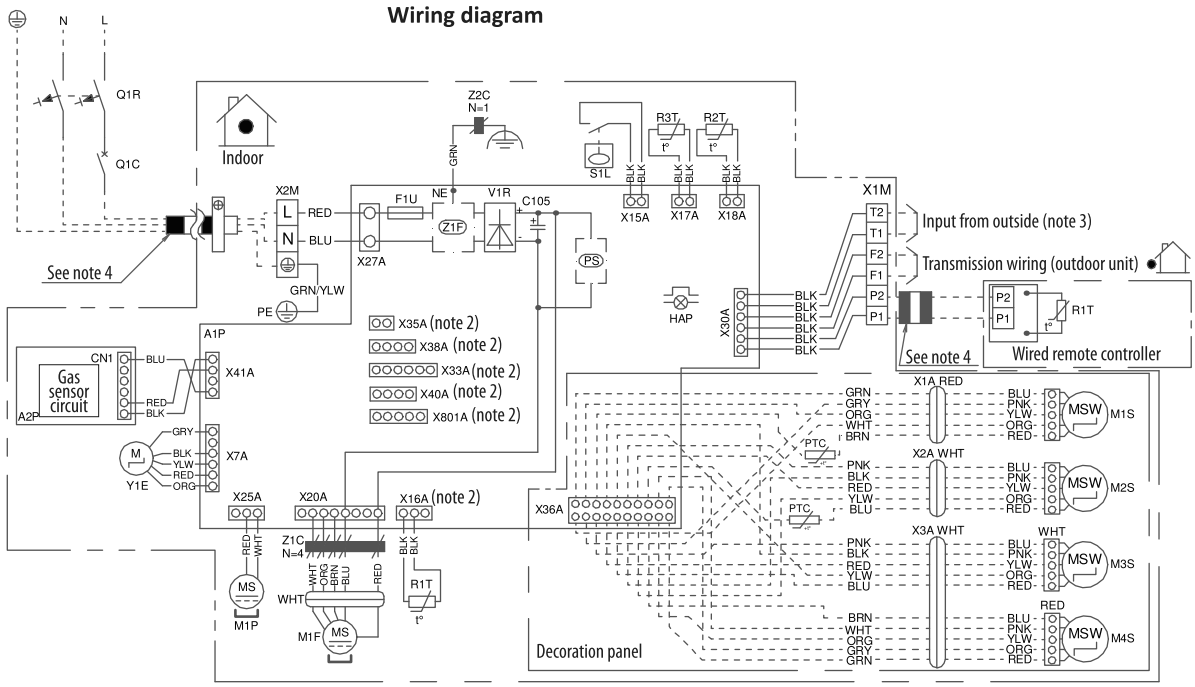

Indoor unit	
A1P	Printed circuit board (main)
C105	Capacitor
F1U	Fuse (T, 3.15A, 250V)
HAP	Flashing lamp (Service monitor: green)
M1P	Motor (drain pump)
M1F	Motor (indoor fan)
R1T	Thermistor (air)
R2T, R3T	Thermistor (coil)
S1L	Float switch (drain pump)
V1R	Diode bridge
X1A-X801A	Connector
X1M	Terminal block (Remote controller)
X2M	Terminal block (Power supply)
Z1C, Z2C	Ferrite core
Z1F	Noise filter
PS	Switching power supply
Y1E	Electronic expansion valve
Q1R	Residual current device
Q1C	Circuit breaker
NE	Noiseless earth
CN1	Gas sensor connector
A2P	Printed circuit board (gas sensor)
Wired remote controller	
R1T	Thermistor (air)
Decoration panel	
M1S-M2S	Motor (panel)
M3S-M4S	Motor (Hor. and vert. swing)
PTC	PTC thermistor

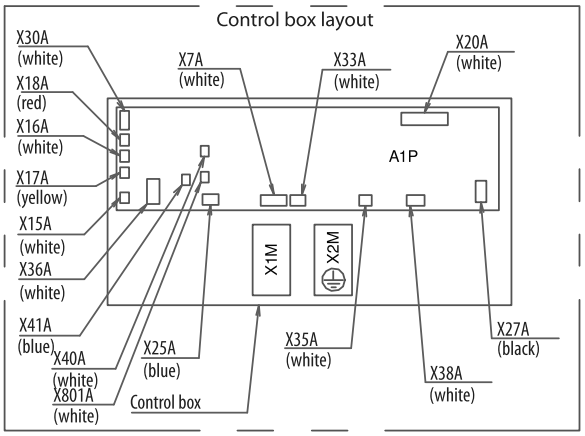

NOTES

1. ▭▭▭ : terminal block, ▭ : connector, ▬▬ : field wiring
2. X16A, X33A, X35A, X38A, X40A, X801A are (re)connected when optional accessories are being used, see wiring diagram of this accessory.
3. Can be used for fire alarm input only.
4. For specification of wiring refer to the installation manual.

WIRE COLORS

BLK	:	Black
BLU	:	Blue
YLW	:	Yellow
BRN	:	Brown
ORG	:	Orange
RED	:	Red
WHT	:	White
GRN	:	Green
PNK	:	Pink
GRY	:	Grey

3D146874A