7 Dimensional drawings

7 - 1 Dimensional Drawings

FXHQ100A

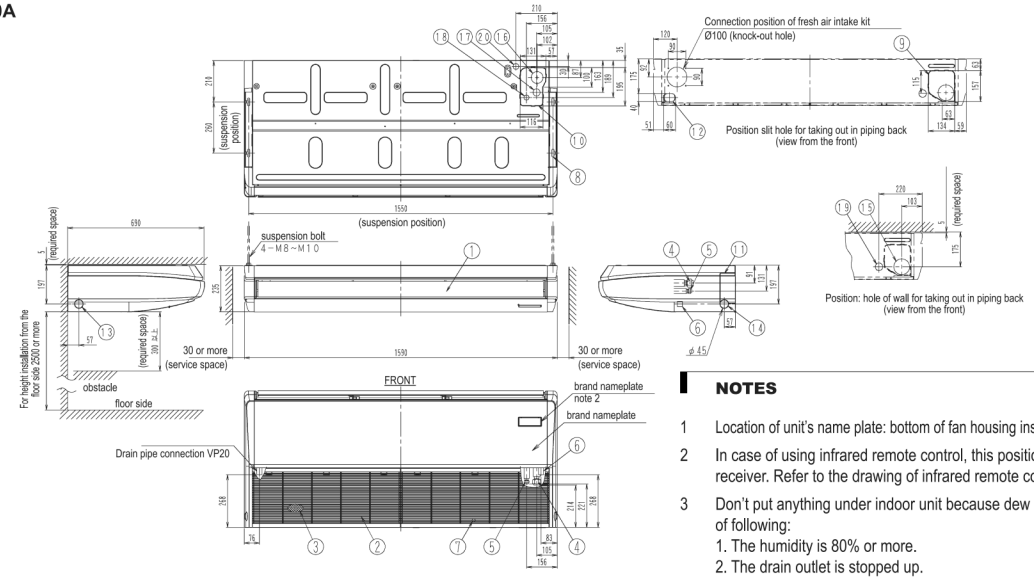

3D069633D

NOTES

1 Location of unit's name plate: bottom of fan housing inside the suction grille.

2 In case of using infrared remote control, this position will be a signal receiver. Refer to the drawing of infrared remote control in detail.

3 Don't put anything under indoor unit because dew may fall by reason of following:
1. The humidity is 80% or more.
2. The drain outlet is stopped up.
3. The air filter is dirty.

Nr	Name	Description
1	Air discharge grille	
2	Air suction grille	
3	Air filter	
4	Gas pipe connection	Ø15.9 flare
5	Liquid pipe connection	Ø9.5 flare
6	Drain pipe connection	VP20
7	Earth terminal (inside electric components box)	M4
8	Hanger bracket	
9	Backward piping and wiring connection opening lid	
10	Upward piping and wiring connection opening lid	

11	Right side pipe connection	slit hole
12	Left back drain pipe connection	slit hole
13	Left side drain pipe connection	slit hole
14	Right side drain pipe connection	slit hole
15	Hole of wall for taking out in piping back	Ø100
16	Upward drain pipe connection	Ø60
17	Upward gas pipe connection	Ø36
18	Upward liquid pipe connection	Ø26
19	Power source wiring and a unit wiring back connection	Ø29
20	Power source wiring and a unit wiring upper connection	Ø29