10 Wiring diagrams

10 - 1 Wiring Diagrams - Single Phase

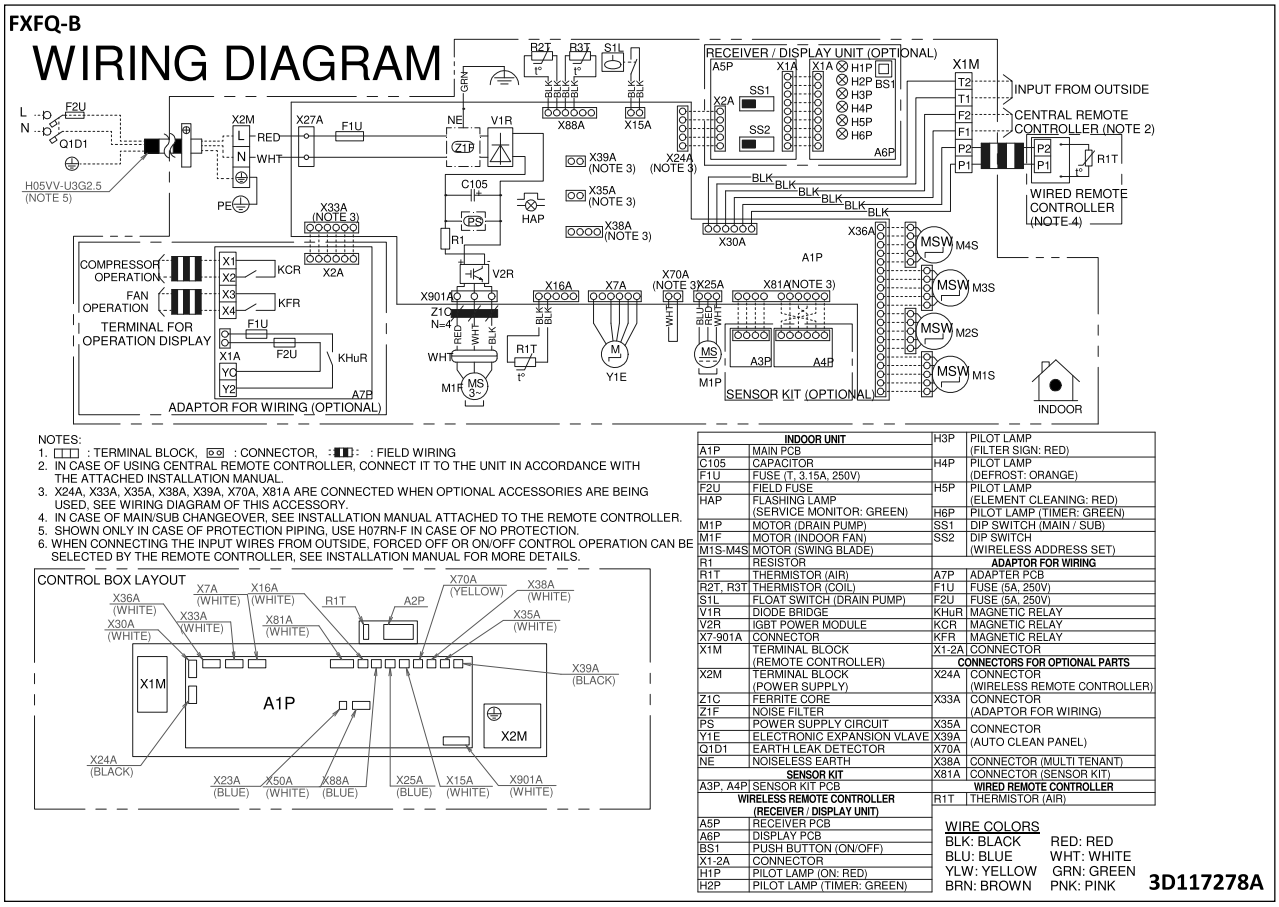

NOTES:
1. ▭▭ : TERMINAL BLOCK, ⊡⊡ : CONNECTOR, : : FIELD WIRING
2. IN CASE OF USING CENTRAL REMOTE CONTROLLER, CONNECT IT TO THE UNIT IN ACCORDANCE WITH THE ATTACHED INSTALLATION MANUAL.
3. X24A, X33A, X35A, X38A, X39A, X70A, X81A ARE CONNECTED WHEN OPTIONAL ACCESSORIES ARE BEING USED, SEE WIRING DIAGRAM OF THIS ACCESSORY.
4. IN CASE OF MAIN/SUB CHANGEOVER, SEE INSTALLATION MANUAL ATTACHED TO THE REMOTE CONTROLLER.
5. SHOWN ONLY IN CASE OF PROTECTION PIPING, USE H07RN-F IN CASE OF NO PROTECTION.
6. WHEN CONNECTING THE INPUT WIRES FROM OUTSIDE, FORCED OFF OR ON/OFF CONTROL OPERATION CAN BE SELECTED BY THE REMOTE CONTROLLER, SEE INSTALLATION MANUAL FOR MORE DETAILS.

INDOOR UNIT		H3P	PILOT LAMP (FILTER SIGN: RED)
A1P	MAIN PCB	H4P	PILOT LAMP (DEFROST: ORANGE)
C105	CAPACITOR	H5P	PILOT LAMP (ELEMENT CLEANING: RED)
F1U	FUSE (T, 3.15A, 250V)	H6P	PILOT LAMP (TIMER: GREEN)
F2U	FIELD FUSE	SS1	DIP SWITCH (MAIN / SUB)
HAP	FLASHING LAMP (SERVICE MONITOR: GREEN)	SS2	DIP SWITCH (WIRELESS ADDRESS SET)
M1P	MOTOR (DRAIN PUMP)	**ADAPTOR FOR WIRING**	
M1F	MOTOR (INDOOR FAN)	A7P	ADAPTER PCB
M1S-M4S	MOTOR (SWING BLADE)	F1U	FUSE (5A, 250V)
R1	RESISTOR	F2U	FUSE (5A, 250V)
R1T	THERMISTOR (AIR)	KHuR	MAGNETIC RELAY
R2T, R3T	THERMISTOR (COIL)	KCR	MAGNETIC RELAY
S1L	FLOAT SWITCH (DRAIN PUMP)	KFR	MAGNETIC RELAY
V1R	DIODE BRIDGE	X1-2A	CONNECTOR
V2R	IGBT POWER MODULE	**CONNECTORS FOR OPTIONAL PARTS**	
X7-901A	CONNECTOR	X24A	CONNECTOR (WIRELESS REMOTE CONTROLLER)
X1M	TERMINAL BLOCK (REMOTE CONTROLLER)	X33A	CONNECTOR (ADAPTOR FOR WIRING)
X2M	TERMINAL BLOCK (POWER SUPPLY)	X35A, X39A	CONNECTOR (AUTO CLEAN PANEL)
Z1C	FERRITE CORE	X70A	CONNECTOR (MULTI TENANT)
Z1F	NOISE FILTER	X38A	CONNECTOR (SENSOR KIT)
PS	POWER SUPPLY CIRCUIT	X81A	CONNECTOR (SENSOR KIT)
Y1E	ELECTRONIC EXPANSION VLAVE	**WIRED REMOTE CONTROLLER**	
Q1D1	EARTH LEAK DETECTOR	R1T	THERMISTOR (AIR)
NE	NOISELESS EARTH		
SENSOR KIT			
A3P, A4P	SENSOR KIT PCB		
WIRELESS REMOTE CONTROLLER (RECEIVER / DISPLAY UNIT)			
A5P	RECEIVER PCB		
A6P	DISPLAY PCB		
BS1	PUSH BUTTON (ON/OFF)		
X1-2A	CONNECTOR		
H1P	PILOT LAMP (ON: RED)		
H2P	PILOT LAMP (TIMER: GREEN)		

WIRE COLORS

BLK: BLACK	RED: RED
BLU: BLUE	WHT: WHITE
YLW: YELLOW	GRN: GREEN
BRN: BROWN	PNK: PINK

3D117278A