# 8 Wiring diagrams

## 8 - 1 Wiring Diagrams - Single Phase



**FXFN-B**

### Wiring diagram

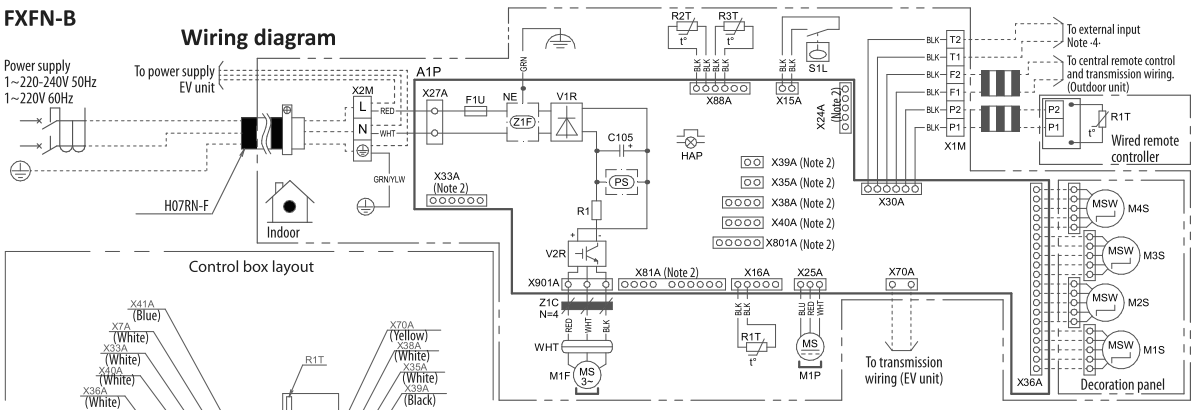


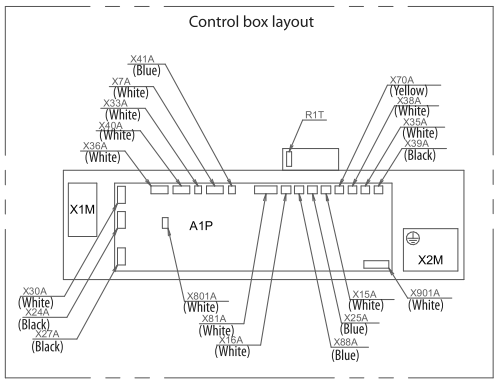


**NOTES**

1. ▭▭▭: terminal block, ▭▭: connector, ▭▭▭: field wiring
2. X24A, X33A, X35A, X38A, X39A, X40A, X81A, X801A are connected when optional accessories are being used, see wiring diagram of this accessory.
3. When using a central remote control, connect it to the unit according to the installation manual.
4. When connecting the input wires from outside, forced OFF or On/OFF control operation can be selected by remote control. For more information, refer to the installation manual.

| Indoor unit | |
|---|---|
| A1P | Printed circuit board |
| C105 | Capacitor |
| F1U | Fuse (T, 3.15A, 250V) |
| HAP | Flashing lamp (service monitor: green) |
| M1P | Motor (drain pump) |
| M1F | Motor (indoor fan) |
| NE | Noiseless earth |
| PS | Switching power supply |
| R1 | Resistor |
| R1T | Thermistor (air) |
| R2T, R3T | Thermistor (coil) |
| S1L | Float switch (drain pump) |
| V1R | Diode bridge |
| V2R | IGBT power module |
| X7A-X901A | Connector |
| X1M | Terminal block (remote controller) |
| X2M | Terminal block (power supply) |
| Z1C | Ferrite core |
| Z1F | Noise filter |

| Wired remote controller | |
|---|---|
| R1T | Thermistor (air) |
| **Decoration panel** | |
| M1S-M4S | Motor (swing blade) |

**WIRE COLOURS**

BLK : Black
RED : Red
BLU : Blue
WHT : White
YLW : Yellow
GRN : Green
BRN : Brown
PNK : Pink
GRU : Grey
ORG : Orange

**3D136862**