7 Dimensional drawings

7 - 1 Dimensional Drawings

FXCQ20-40A

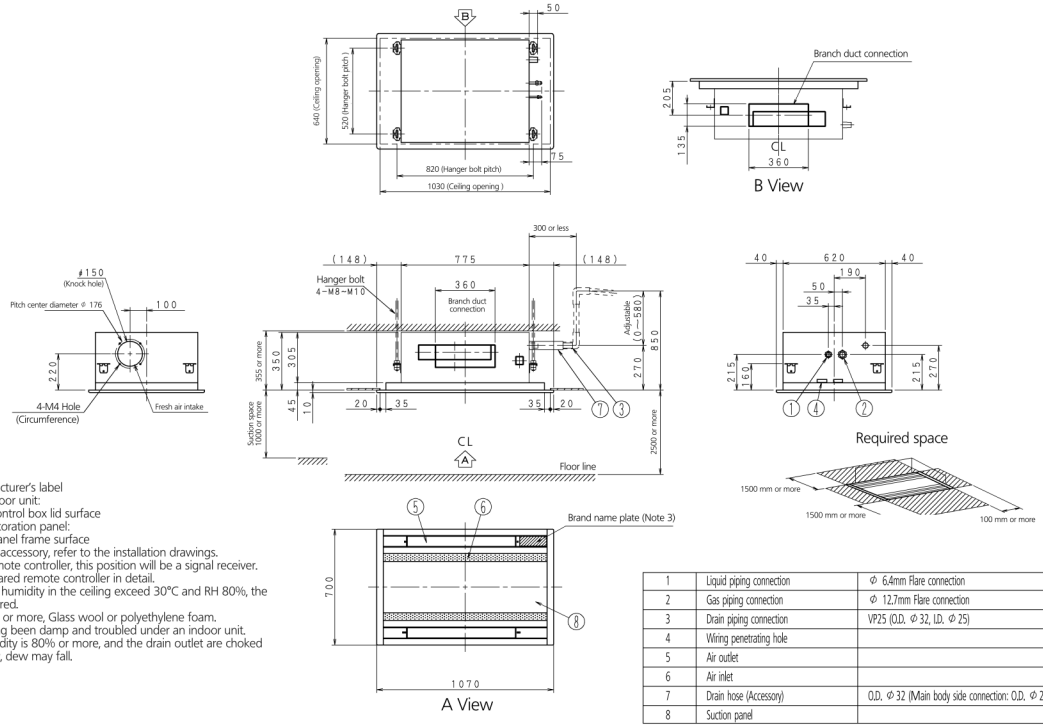

Notes:

1. Sticking location for manufacturer's label
   Manufacturer's label for indoor unit:
   Suction panel inner side's control box lid surface
   Manufacturer's label for decoration panel:
   Suction panel inner side's panel frame surface
2. When installing an optional accessory, refer to the installation drawings.
3. In case of using infrared remote controller, this position will be a signal receiver. Refer to the drawing of infrared remote controller in detail.
4. When the temperature and humidity in the ceiling exceed 30°C and RH 80%, the additional insulation is required.
   Insulation: Thickness 10mm or more, Glass wool or polyethylene foam.
5. Please do not place the thing been damp and troubled under an indoor unit. When the case where humidity is 80% or more, and the drain outlet are choked up and the air filter are dirty, dew may fall.

1	Liquid piping connection	φ 6.4mm Flare connection
2	Gas piping connection	φ 12.7mm Flare connection
3	Drain piping connection	VP25 (O.D. φ 32, I.D. φ 25)
4	Wiring penetrating hole	
5	Air outlet	
6	Air inlet	
7	Drain hose (Accessory)	O.D. φ 32 (Main body side connection: O.D. φ 26)
8	Suction panel	

3D079628

FXCQ50A

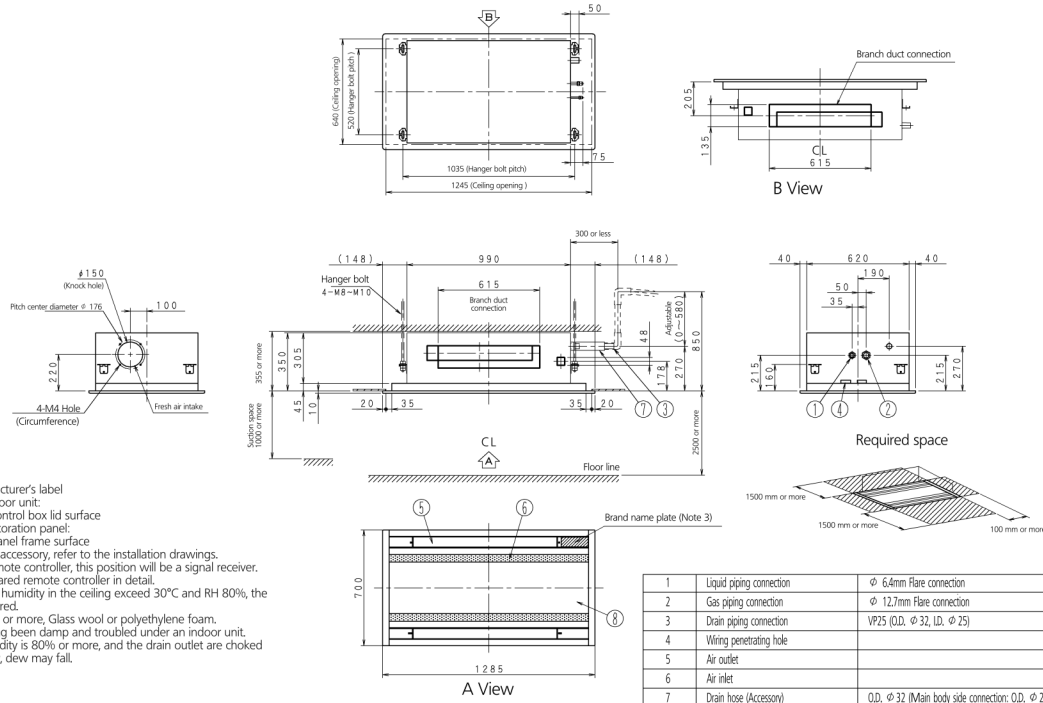

Notes:

1. Sticking location for manufacturer's label
   Manufacturer's label for indoor unit:
   Suction panel inner side's control box lid surface
   Manufacturer's label for decoration panel:
   Suction panel inner side's panel frame surface
2. When installing an optional accessory, refer to the installation drawings.
3. In case of using infrared remote controller, this position will be a signal receiver. Refer to the drawing of infrared remote controller in detail.
4. When the temperature and humidity in the ceiling exceed 30°C and RH 80%, the additional insulation is required.
   Insulation: Thickness 10mm or more, Glass wool or polyethylene foam.
5. Please do not place the thing been damp and troubled under an indoor unit. When the case where humidity is 80% or more, and the drain outlet are choked up and the air filter are dirty, dew may fall.

1	Liquid piping connection	φ 6.4mm Flare connection
2	Gas piping connection	φ 12.7mm Flare connection
3	Drain piping connection	VP25 (O.D. φ 32, I.D. φ 25)
4	Wiring penetrating hole	
5	Air outlet	
6	Air inlet	
7	Drain hose (Accessory)	O.D. φ 32 (Main body side connection: O.D. φ 26)
8	Suction panel	

3D079629