10 Wiring diagrams

10 - 1 Wiring Diagrams - Single Phase

10

FXAA-A

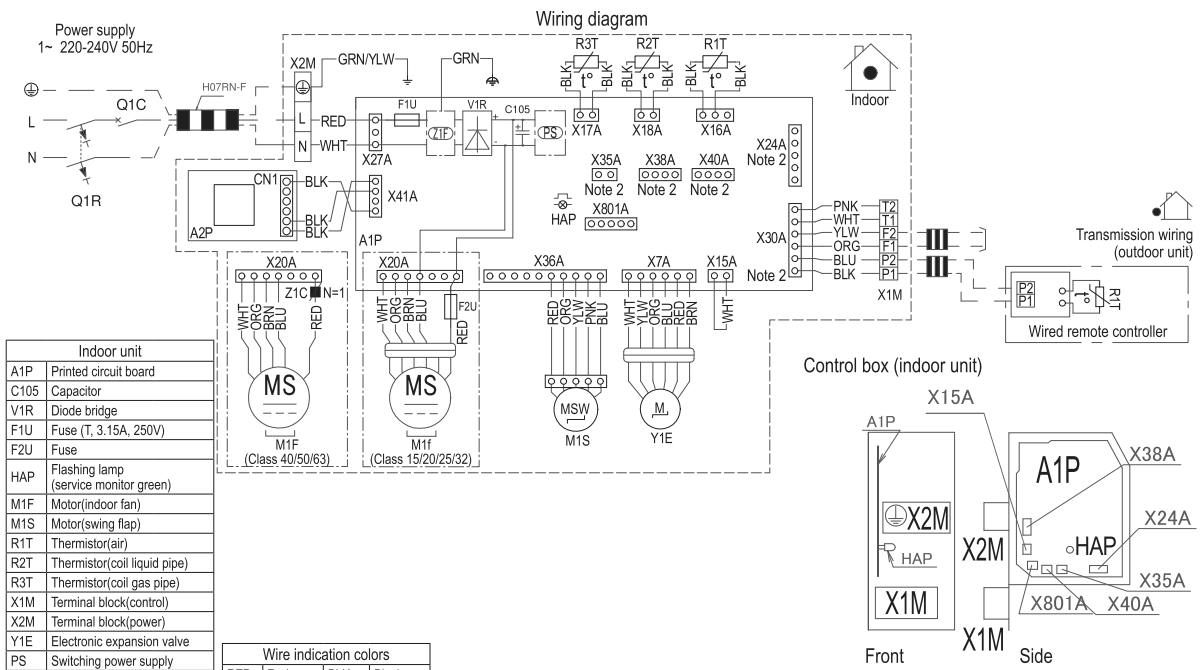

Indoor unit	
A1P	Printed circuit board
C105	Capacitor
V1R	Diode bridge
F1U	Fuse (T, 3.15A, 250V)
F2U	Fuse
HAP	Flashing lamp (service monitor green)
M1F	Motor(indoor fan)
M1S	Motor(swing flap)
R1T	Thermistor(air)
R2T	Thermistor(coil liquid pipe)
R3T	Thermistor(coil gas pipe)
X1M	Terminal block(control)
X2M	Terminal block(power)
Y1E	Electronic expansion valve
PS	Switching power supply
Z1C	Ferrite core
Z1F	Noise filter
CN1	Gas sensor connector
A2P	Printed circuit board - (gas sensor)
Q1R	Residual current device
Q1C	Circuit breaker

Wire indication colors			
RED:	Red	BLK:	Black
WHT:	White	ORG:	Orange
GRN:	Green	BLU:	Blue
PNK:	Pink	BRN:	Brown
YLW:	Yellow		
Wired remote controller			
R1T	Thermistor (air)		

NOTES

1. : terminal block, : connector, : short circuit connector, : field wiring, : protective earth (screw), : noiseless earth
2. X15A,X24A,X35A, X38A, X40A AND X801A are connected when the optional accessories are used.

3D129230B