7 Wiring diagrams

7 - 1 Wiring Diagrams - Single Phase

FVXM-A
CVXM-A

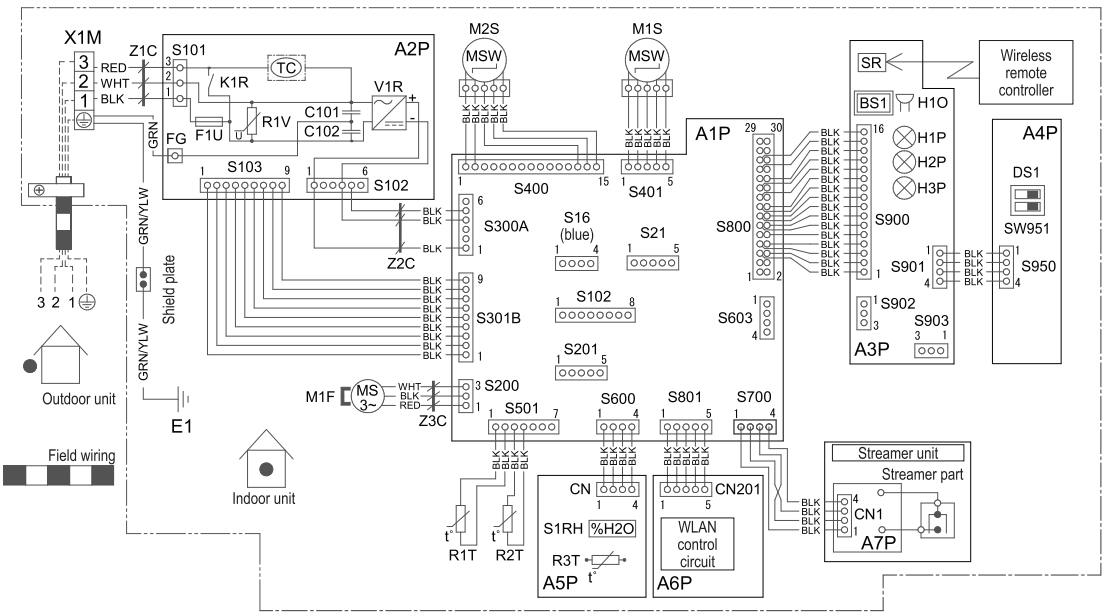

WIRE COLORS

BLK: black
YLW: yellow
RED: red
GRN: green
WHT: white

CAUTION

When the main power is turned off and then back on again, operation will resume automatically.

Connector	CN, CN1,CN201 S16~950, FG
Terminal block	X1M
Fuse (T, 3.15A, 250V)	F1U
Motor (indoor fan)	M1F
Motor (swing flap)	M1S
Motor (damper)	M2S
Printed circuit	A1~7P

Thermistor	R1~3T
Button switch	BS1
Pilot lamp	H1~3P
Signal receiver	SR
Buzzer	H1O
Humidity sensor	S1RH
Ferrite core	Z1~3C
Heat exchanger	E1

Magnetic relay	K1R
Rectifier	V1R
Capacitor	C101, C102
Transmission circuit	TC
Protective earth	⏚
Varistor	R1V
Dip switch	DS1

3D129863