6 Wiring diagrams

6 - 1 Wiring Diagrams - Single Phase

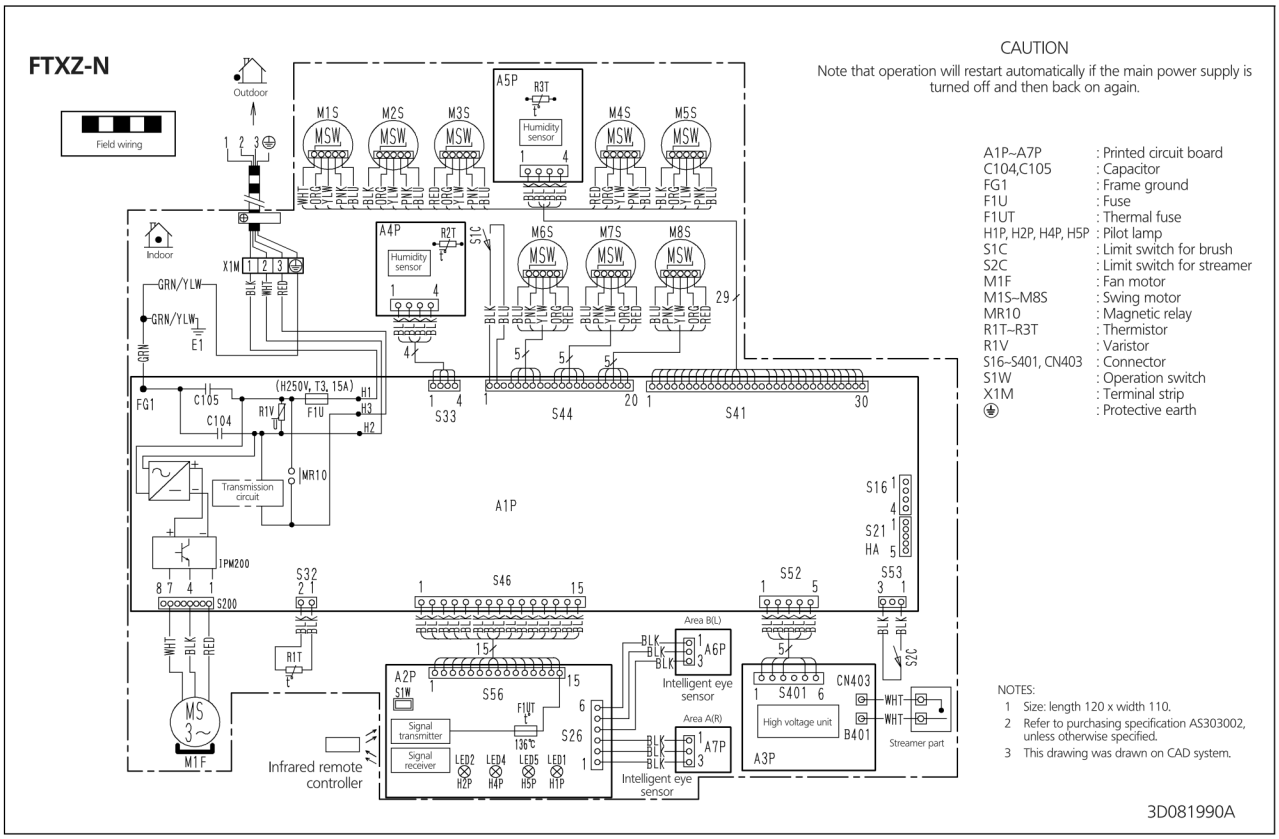

CAUTION

Note that operation will restart automatically if the main power supply is turned off and then back on again.

A1P~A7P	: Printed circuit board
C104,C105	: Capacitor
FG1	: Frame ground
F1U	: Fuse
F1UT	: Thermal fuse
H1P, H2P, H4P, H5P	: Pilot lamp
S1C	: Limit switch for brush
S2C	: Limit switch for streamer
M1F	: Fan motor
M1S~M8S	: Swing motor
MR10	: Magnetic relay
R1T~R3T	: Thermistor
R1V	: Varistor
S16~S401, CN403	: Connector
S1W	: Operation switch
X1M	: Terminal strip
⏚	: Protective earth

NOTES:

1. Size: length 120 x width 110.
2. Refer to purchasing specification AS303002, unless otherwise specified.
3. This drawing was drawn on CAD system.

3D081990A