# 7 Wiring diagrams

## 7 - 1 Wiring Diagrams - Three Phase



**FTXP20-35N** **Wiring diagram**

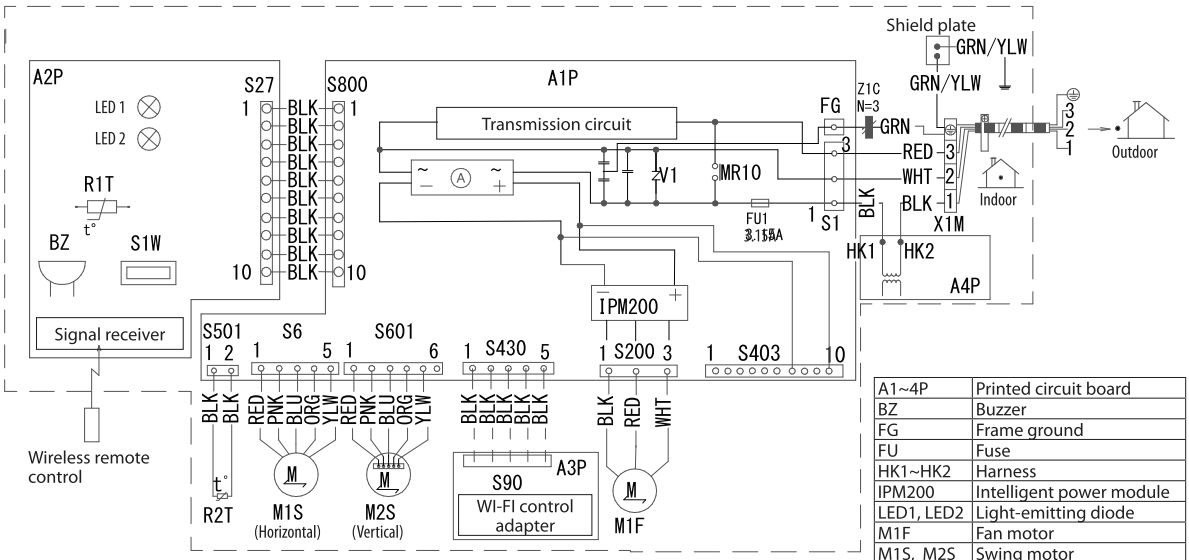


| | |
|---|---|
| A1~4P | Printed circuit board |
| BZ | Buzzer |
| FG | Frame ground |
| FU | Fuse |
| HK1~HK2 | Harness |
| IPM200 | Intelligent power module |
| LED1, LED2 | Light-emitting diode |
| M1F | Fan motor |
| M1S, M2S | Swing motor |
| MR10 | Magnetic relay |
| R1T, R2T | Thermistor |
| S1-S800 | Connector |
| S1W | Operation switch |
| V1 | Varistor |
| X1M | Terminal strip |
| Z1C | Ferrite core |
| ⊕ | Protective earth |
| ⏚ | Earth |
| Ⓐ | Rectifier |

BLK : Black
BLU : Blue
BRN : Brown
GRN : Green
ORG : Orange
PNK : Pink
RED : Red
WHT : White
YLW : Yellow

Field wiring :

**CAUTION**

When the main power is turned off and then back on again, operation will resume automatically.

**NOTES**

1. Size : length 70 x width 120
2. Unless otherwise specified refer to purchasing specification AS303002.

**3D142356**

**FTXP50-71N**

**Wiring diagram**

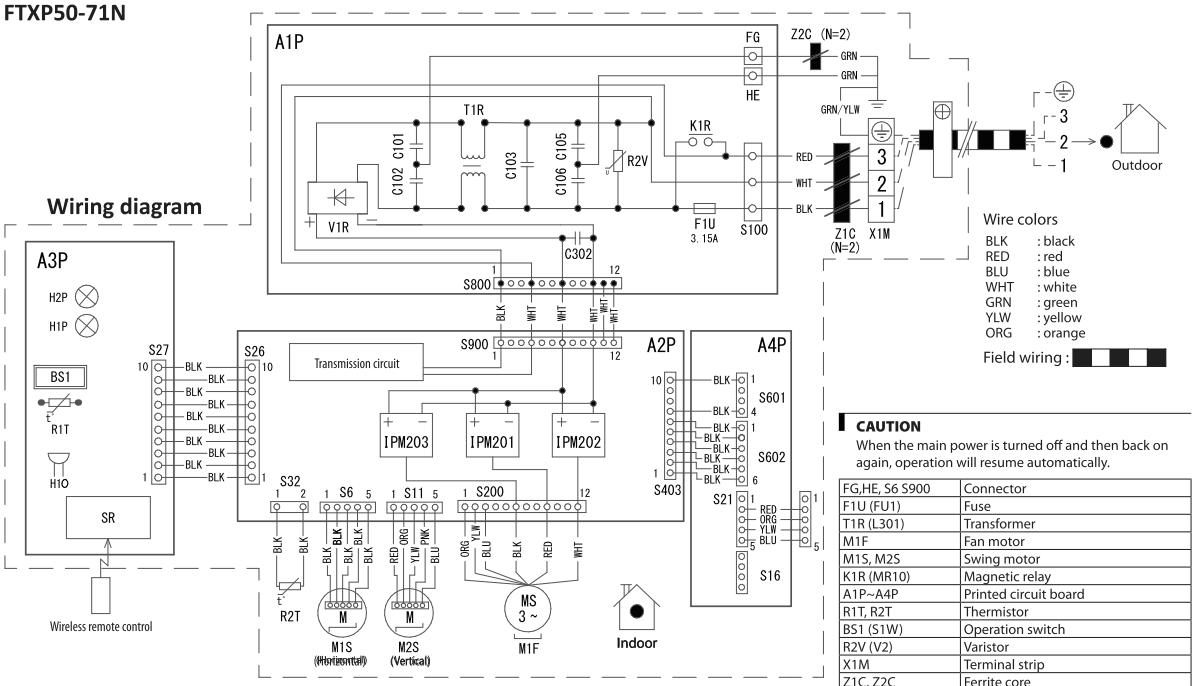


Wire colors

BLK : black
RED : red
BLU : blue
WHT : white
GRN : green
YLW : yellow
ORG : orange

Field wiring :

**CAUTION**

When the main power is turned off and then back on again, operation will resume automatically.

| | |
|---|---|
| FG,HE, S6 S900 | Connector |
| F1U (FU1) | Fuse |
| T1R (L301) | Transformer |
| M1F | Fan motor |
| M1S, M2S | Swing motor |
| K1R (MR10) | Magnetic relay |
| A1P~A4P | Printed circuit board |
| R1T, R2T | Thermistor |
| BS1 (S1W) | Operation switch |
| R2V (V2) | Varistor |
| X1M | Terminal strip |
| Z1C, Z2C | Ferrite core |
| IPM201~203 | Intelligent power module |
| H1P, H2P (LED 1~2) | Pilot lamp |
| ⊕ | Protective earth |
| V1R (DB301) | Diode bridge |
| H10 (BZ) | Buzzer |
| C101~302 | Capacitor |
| SR (WLU) | Signal receiver |

**NOTES**

1. Size: length 86 X width 130.
2. Refer to purchasing specification AS303002, unless otherwise specified.

**3D142306A**