7 Wiring diagrams

7 - 1 Wiring Diagrams - Three Phase

FTXP20-35N9 **Wiring diagram**

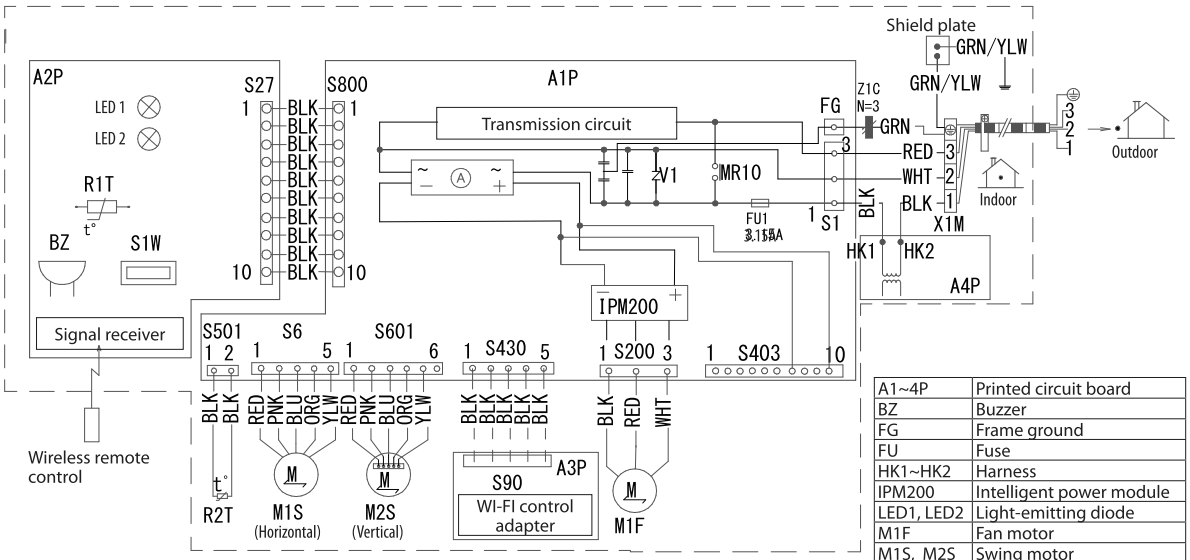

A1~4P	Printed circuit board
BZ	Buzzer
FG	Frame ground
FU	Fuse
HK1~HK2	Harness
IPM200	Intelligent power module
LED1, LED2	Light-emitting diode
M1F	Fan motor
M1S, M2S	Swing motor
MR10	Magnetic relay
R1T, R2T	Thermistor
S1-S800	Connector
S1W	Operation switch
V1	Varistor
X1M	Terminal strip
Z1C	Ferrite core
⊕	Protective earth
⏚	Earth
Ⓐ	Rectifier

BLK : Black
BLU : Blue
BRN : Brown
GRN : Green
ORG : Orange
PNK : Pink
RED : Red
WHT : White
YLW : Yellow

Field wiring :

CAUTION

When the main power is turned off and then back on again, operation will resume automatically.

NOTES

1. Size : length 70 x width 120
2. Unless otherwise specified refer to purchasing specification AS303002.

3D142356