5 Dimensional drawings

5 - 1 Dimensional Drawings

FDXM25-35F9

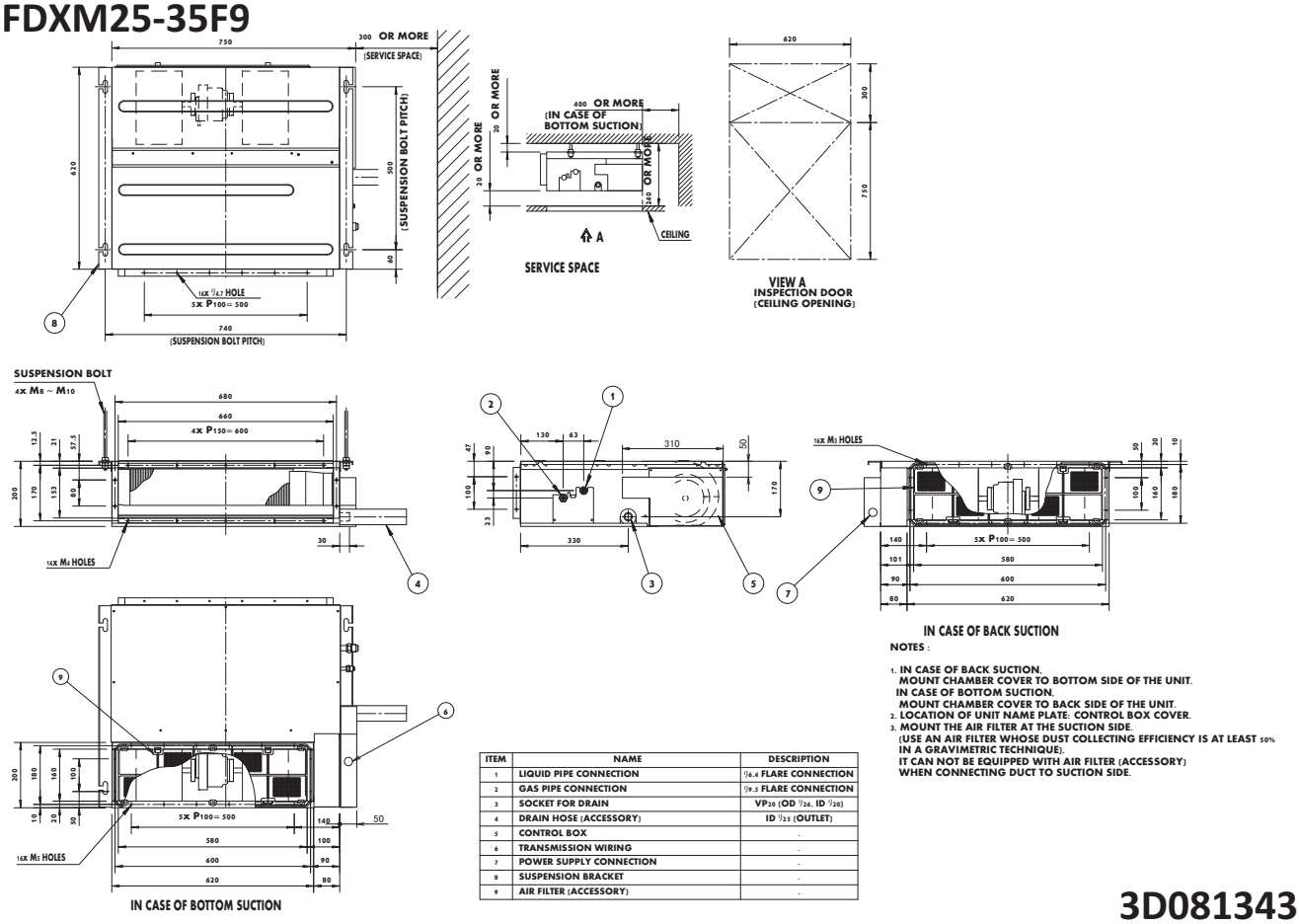

NOTES :

1. IN CASE OF BACK SUCTION,
   MOUNT CHAMBER COVER TO BOTTOM SIDE OF THE UNIT.
   IN CASE OF BOTTOM SUCTION,
   MOUNT CHAMBER COVER TO BACK SIDE OF THE UNIT.
2. LOCATION OF UNIT NAME PLATE: CONTROL BOX COVER.
3. MOUNT THE AIR FILTER AT THE SUCTION SIDE.
   (USE AN AIR FILTER WHOSE DUST COLLECTING EFFICIENCY IS AT LEAST 50% IN A GRAVIMETRIC TECHNIQUE).
   IT CAN NOT BE EQUIPPED WITH AIR FILTER (ACCESSORY) WHEN CONNECTING DUCT TO SUCTION SIDE.

ITEM	NAME	DESCRIPTION
1	LIQUID PIPE CONNECTION	1/6.4 FLARE CONNECTION
2	GAS PIPE CONNECTION	1/9.5 FLARE CONNECTION
3	SOCKET FOR DRAIN	VP20 (OD 1/26, ID 1/20)
4	DRAIN HOSE (ACCESSORY)	ID 1/25 (OUTLET)
5	CONTROL BOX	-
6	TRANSMISSION WIRING	-
7	POWER SUPPLY CONNECTION	-
8	SUSPENSION BRACKET	-
9	AIR FILTER (ACCESSORY)	-

3D081343

FDXM50-60F9

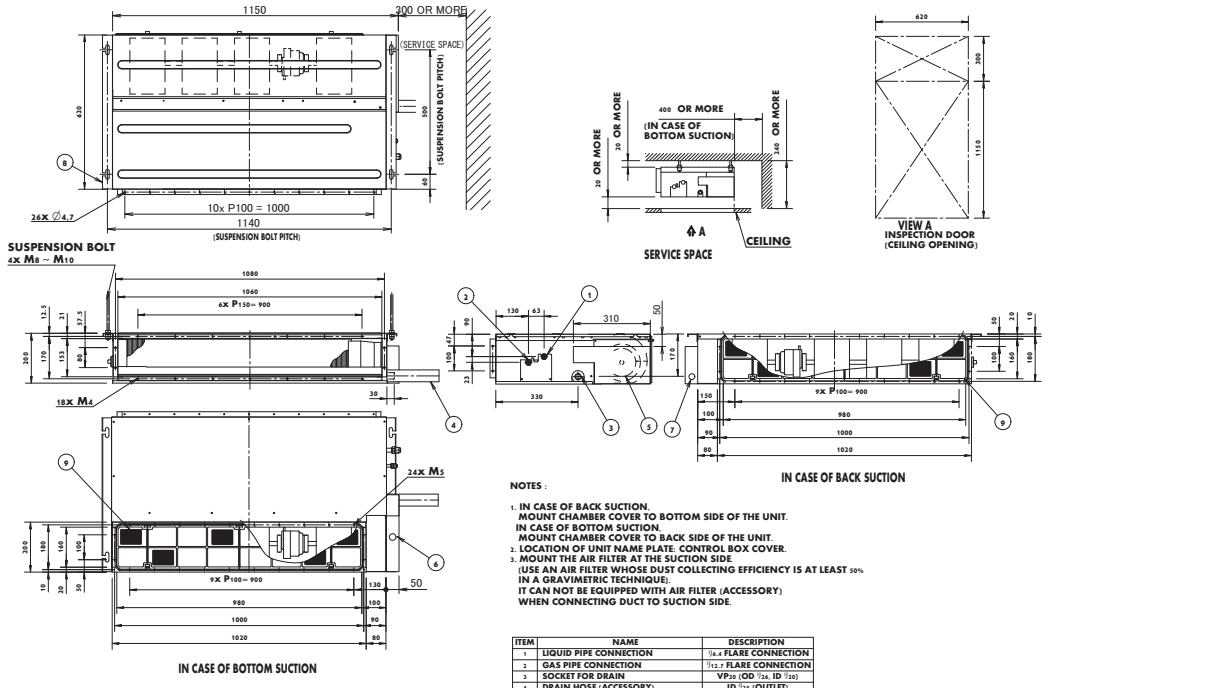

NOTES :

1. IN CASE OF BACK SUCTION,
   MOUNT CHAMBER COVER TO BOTTOM SIDE OF THE UNIT.
   IN CASE OF BOTTOM SUCTION,
   MOUNT CHAMBER COVER TO BACK SIDE OF THE UNIT.
2. LOCATION OF UNIT NAME PLATE: CONTROL BOX COVER.
3. MOUNT THE AIR FILTER AT THE SUCTION SIDE.
   (USE AN AIR FILTER WHOSE DUST COLLECTING EFFICIENCY IS AT LEAST 50% IN A GRAVIMETRIC TECHNIQUE).
   IT CAN NOT BE EQUIPPED WITH AIR FILTER (ACCESSORY) WHEN CONNECTING DUCT TO SUCTION SIDE.

ITEM	NAME	DESCRIPTION
1	LIQUID PIPE CONNECTION	1/6.4 FLARE CONNECTION
2	GAS PIPE CONNECTION	1/12.7 FLARE CONNECTION
3	SOCKET FOR DRAIN	VP20 (OD 1/26, ID 1/20)
4	DRAIN HOSE (ACCESSORY)	ID 1/25 (OUTLET)
5	CONTROL BOX	-
6	TRANSMISSION WIRING	-
7	POWER SUPPLY CONNECTION	-
8	SUSPENSION BRACKET	-
9	AIR FILTER (ACCESSORY)	-

3D081360