9 Wiring diagrams

9 - 1 Wiring Diagrams - Three Phase

FDA125A

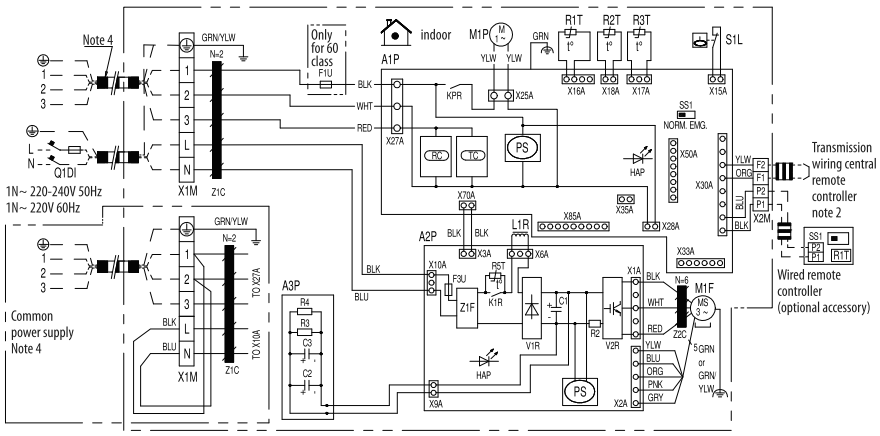

Colors

BLK	: Black
BLU	: Blue
BRN	: Brown
GRY	: Grey
ORG	: Orange
PNK	: Pink
RED	: Red
WHT	: White
YLW	: Yellow
GRN	: Green

Field wiring:

L	: Live
N	: Neutral
●	: Wire clamp
	: Connector
⏚	: Protective earth

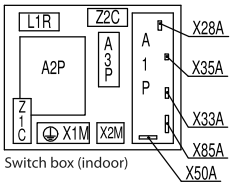

Switch box (indoor)

Indoor unit	
A1P	Printed circuit board
A2P	Printed circuit board (fan)
A3P	Printed circuit board (capacitor)
C1,C2,C3	Capacitor
F1U	Fuse (T, 5A, 250V)
F3U	Fuse (T, 6.3A, 250V)
HAP	Light emitting diode (service monitor-green)
KPR, K1R	Magnetic relay
L1R	Reactor
M1F	Motor (fan)
PS	Switching power supply
Q1DI	Earth leak detector
R2	Current sensing device
R3, R4	Resistor (electric discharge)
R1T	Thermistor (suction air)
R2T	Thermistor (liquid)
R3T	Thermistor (coil)
R5T	Thermistor NTC (current limiting)
SS1	Selector switch (emergency)
S1L	Float switch
V1R	Diode bridge
V2R	Power module
X1M	Terminal strip (power supply)
X2M	Terminal strip (control)
Z1C, Z2C	Noise filter (ferrite core)
Z1F	Noise filter
(RC)	Signal receiver circuit
(TC)	Signal transmission circuit
Connector optional accessory	
X28A	Connector (power supply for wiring)
X33A	Connector (for wiring)
X35A	Connector (adapter)
X50A	Connector (wlan adapter)
X85A	Connector (for multi zoning)
Wired remote controller	
R1T	Thermistor (air)
SS1	Selector switch (main/sub)

NOTES

1. Use copper conductors only.
2. When using the central remote controller, see manual for connection to the unit.
3. The remote controller model varies according to the combination system. See technical materials and catalogues, etc. Before connecting.
4. Refer to installation manual

2TW31296-3A