FCAG-A

Notes

1. Location of nameplate
   The unit nameplate is located on the control box cover.
   The decoration panel nameplate is located on the piping-side panel frame, under the corner cover.
2. When installing optional accessories, refer to their respective documentation.
3. Make sure the distance between the ceiling and the cassette does not exceed 35mm.
4. The maximum ceiling opening is 910mm.
5. When the conditions in the ceiling exceed 30°C ambient temperature and 80% relative humidity, or when fresh air is inducted into the ceiling, additional insulation is required (polyethylene foam, thickness ≥10mm).
6. When installing a sensor kit, there will be a sensor on this location. For details, see the drawing of the sensor kit.
7. When installing a wireless controller, there will be a receiver on this location. For details, see the drawing of the wireless controller.

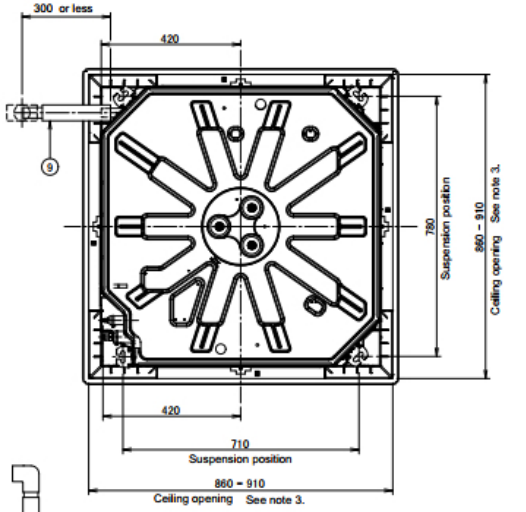

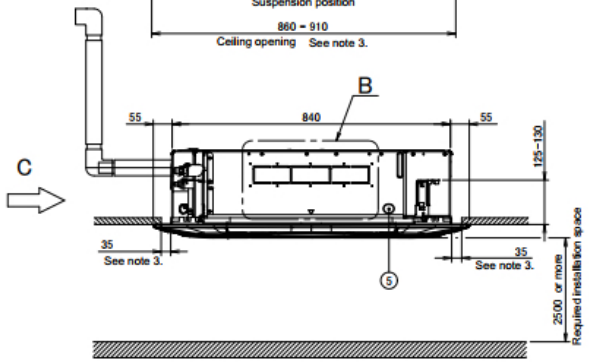

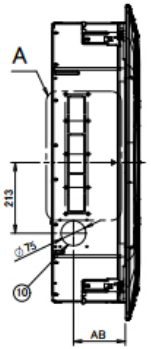

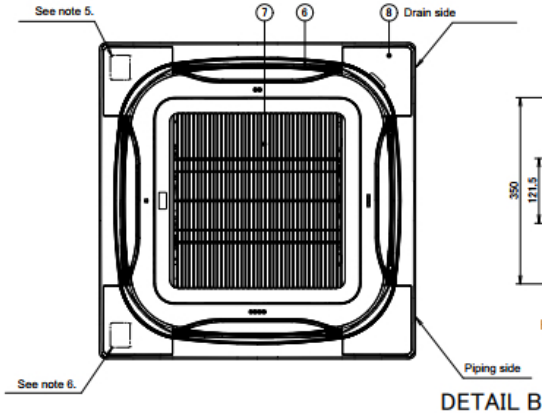

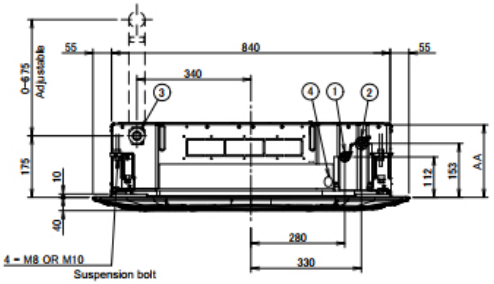

ARROW VIEW C

DETAIL A
2 places
Opposite side

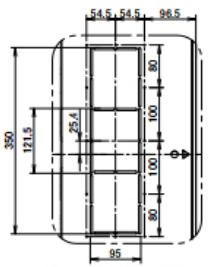

FCAG100/125/140AVEB

DETAIL A
2 places
Opposite side

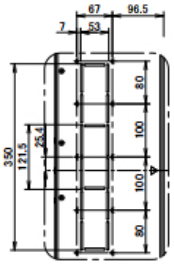

FCAG35/50/60/710AVEB

DETAIL B
2 places
Opposite side

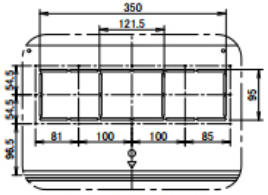

FCAG100/125/140AVEB

DETAIL B
2 places
Opposite side

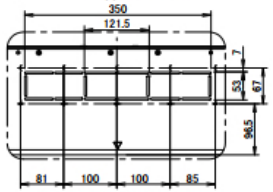

FCAG35/50/60/710AVEB

Respect the distances shown on the figure.

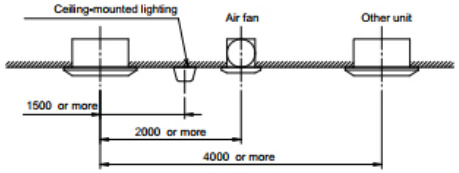

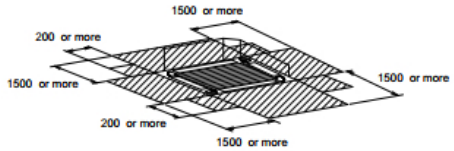

Required installation space

If a discharge outlet is closed up with the "sealing member" option kit, then the required installation space on that (closed up) side is 500mm instead of 1500mm.

Item	Name
1	Liquid pipe connection port
2	Gas pipe connection port
3	Drain pipe connection
4	Power supply wiring intake
5	Transmission wiring intake hole
6	Air discharge outlet
7	Air suction grille
8	Corner decoration cover
9	Drain hose
10	Knockout hole.

2D106292

DIMENSIONAL DRAWINGS