5 Dimensional drawings

5 - 1 Dimensional Drawings

BS4A14AV1B

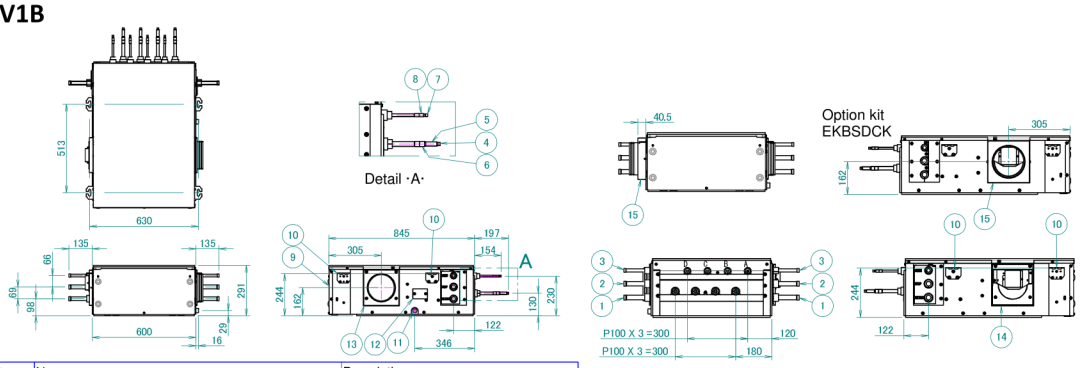

Item	Name	Description
1	Outdoor unit suction gas pipe connection port	Ø ·22.2· brazing connection
2	Outdoor unit HP/LP gas pipe connection port	Ø ·22.2· brazing connection
3	Outdoor unit liquid pipe connection port	Ø ·15.9· brazing connection
4	Indoor unit gas pipe connection port	Ø ·9.52· brazing connection
5	Indoor unit gas pipe connection port	Ø ·12.7· brazing connection
6	Indoor unit gas pipe connection port	Ø ·15.9· brazing connection
7	Indoor unit liquid pipe connection port	Ø ·6.35· brazing connection
8	Indoor unit liquid pipe connection port	Ø ·9.52· brazing connection
9	Control box	
10	Suspension bracket	M8~M10
11	Drain socket	VP20 (OD Ø26, ID Ø20)
12	Inspection hole	
13	Duct connection	Diameter ·Ø160·
14	Damper	
15	Duct connection kit	Diameter ·Ø160·

3D139835

BS6A14AV1B

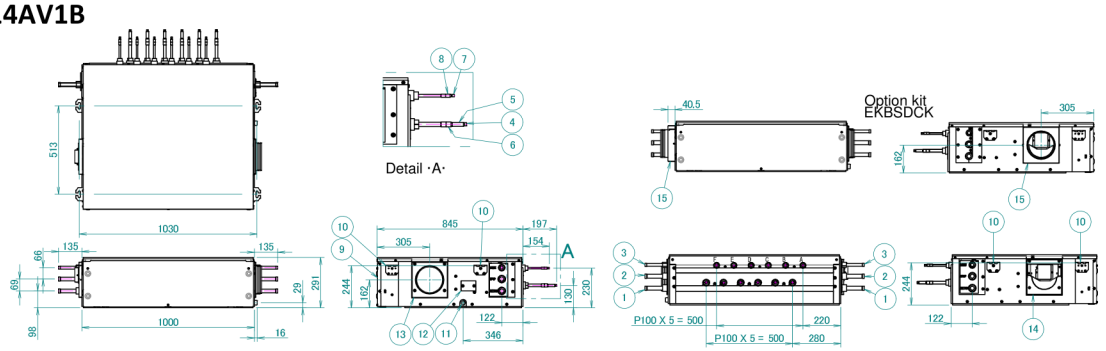

Item	Name	Description
1	Outdoor unit suction gas pipe connection port	Ø ·22.2· brazing connection
2	Outdoor unit HP/LP gas pipe connection port	Ø ·22.2· brazing connection
3	Outdoor unit liquid pipe connection port	Ø ·15.9· brazing connection
4	Indoor unit gas pipe connection port	Ø ·9.52· brazing connection
5	Indoor unit gas pipe connection port	Ø ·12.7· brazing connection
6	Indoor unit gas pipe connection port	Ø ·15.9· brazing connection
7	Indoor unit liquid pipe connection port	Ø ·6.35· brazing connection
8	Indoor unit liquid pipe connection port	Ø ·9.52· brazing connection
9	Control box	
10	Suspension bracket	M8~M10
11	Drain socket	VP20 (OD Ø26, ID Ø20)
12	Inspection hole	
13	Duct connection	Diameter ·Ø160·
14	Damper	
15	Duct connection kit	Diameter ·Ø160·

3D139836