5 Dimensional drawings

5 - 1 Dimensional Drawings

BS12Q14AV1B

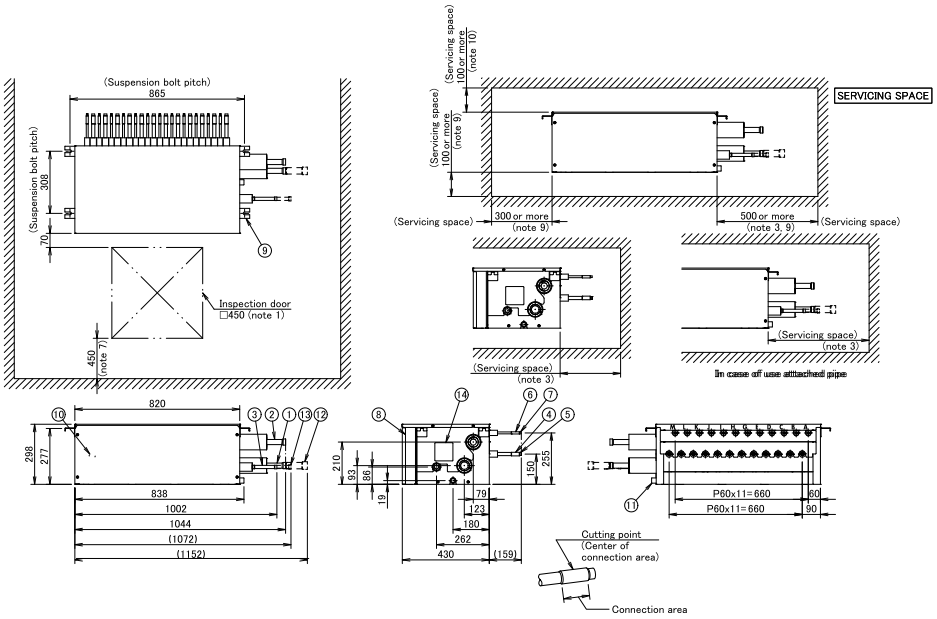

NOTES:

1. BE SURE TO INSTALL AN INSPECTION DOOR AT ELECTRIC BOX SIDE, ANOTHER DOOR IS NECESSARY TO UNLOAD THE PRODUCT.
2. - INSTALL THE BS BOX ON A LOCATION WHERE THE REFRIGERANT NOISE CANNOT DISTURBE THE ROOM OCCUPANTS.
   - TO AVOID THAT REFRIGERANT NOISE DISTURBS THE PEOPLE IN THE ROOM, KEEP AT LEAST 5m PIPING BETWEEN THE OCCUPIED ROOM AND THE BS BOX.
   - IF THERE IS NO FALSE CEILING AT THE ROOM, PLEASE ADD SOUND INSULATION AROUND THE PIPING BETWEEN BS BOX AND INDOOR UNIT, OR KEEP MUCH LONGER LENGTH BETWEEN BS BOX AND OCCUPIED ROOM.
3. OCCUPY THE SPACE WHICH IS POSSIBLE TO INSTALL FIELD PIPES.
4. IN CASE OF CONNECTION WITH A 20~50 TYPE INDOOR UNIT, THERE IS NO NEED TO CUT AND CONNECT AS IT IS. IN CASE OF OTHERS, CUT THE OUTLET PIPE AND CONNECT TO THE CONNECTING PIPE. REFER TO FIGURE ABOVE.
5. REDUCER MAY BE REQUIRED (FIELD SUPPLY) IF JOINT DIAMETER DOES NOT SUIT ON THE TRIPLE PIPING SIDE.
6. INSULATORS ARE NECESSARY (FIELD SUPPLY) FOR THE TRIPLE PIPING SIDE.
7. THIS SPACE IS A SPACE TO KEEP A TOP PANEL WHEN SERVICING.
8. INSTALL IT IN A SPACE WHICH CAN BE SECURED DOWNWARDS SLOPE OF 1/100 OR MORE.
9. IT IS A SPACE FOR REMOVING THE DRAIN PAN.
10. THIS IS A SPACE FOR REMOVING A TOP PANEL WHEN SERVICING.

NUMBER	PART NAME	REMARK
1	OUTDOOR UNIT SUCTION GAS PIPE CONNECTION PORT (NOTE 5, 6)	Ø28.6mm BRAZING CONNECTION
2	OUTDOOR UNIT HP/LP GAS PIPE CONNECTION PORT (NOTE 5, 6)	Ø28.6mm BRAZING CONNECTION
3	OUTDOOR UNIT LIQUID PIPE CONNECTION PORT (NOTE 5, 6)	Ø15.9mm BRAZING CONNECTION
4	INDOOR UNIT GAS PIPE CONNECTION PORT (NOTE 4)	Ø15.9mm BRAZING CONNECTION
5	INDOOR UNIT GAS PIPE CONNECTION PORT (NOTE 4)	Ø12.7mm BRAZING CONNECTION
6	INDOOR UNIT LIQUID PIPE CONNECTION PORT (NOTE 4)	Ø9.5mm BRAZING CONNECTION
7	INDOOR UNIT LIQUID PIPE CONNECTION PORT (NOTE 4)	Ø6.4mm BRAZING CONNECTION
8	ELECTRIC BOX (NOTE 1)	
9	SUSPENSION BRACKETS	M8~M10
10	GROUNDING TERMINAL	M4
11	SOCKET FOR DRAIN	VP20 (O.D.Ø26mm / I.D.Ø20mm)
12	ATTACHED PIPE (NOTE 5, 6)	Ø34.9mm BRAZING CONNECTION
13	ATTACHED PIPE (NOTE 5, 6)	Ø19.1mm BRAZING CONNECTION
14	INSPECTION HOLE	

3D106411

BS16Q14AV1B

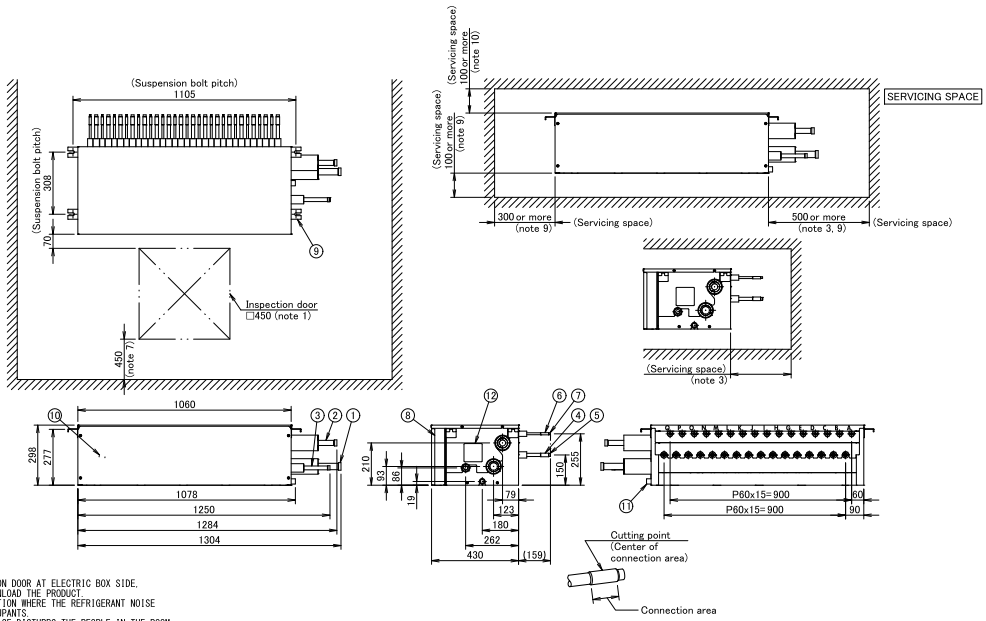

NOTES:

1. BE SURE TO INSTALL AN INSPECTION DOOR AT ELECTRIC BOX SIDE, ANOTHER DOOR IS NECESSARY TO UNLOAD THE PRODUCT.
2. - INSTALL THE BS BOX ON A LOCATION WHERE THE REFRIGERANT NOISE CANNOT DISTURBE THE ROOM OCCUPANTS.
   - TO AVOID THAT REFRIGERANT NOISE DISTURBS THE PEOPLE IN THE ROOM, KEEP AT LEAST 5m PIPING BETWEEN THE OCCUPIED ROOM AND THE BS BOX.
   - IF THERE IS NO FALSE CEILING AT THE ROOM, PLEASE ADD SOUND INSULATION AROUND THE PIPING BETWEEN BS BOX AND INDOOR UNIT, OR KEEP MUCH LONGER LENGTH BETWEEN BS BOX AND OCCUPIED ROOM.
3. OCCUPY THE SPACE WHICH IS POSSIBLE TO INSTALL FIELD PIPES.
4. IN CASE OF CONNECTION WITH A 20~50 TYPE INDOOR UNIT, THERE IS NO NEED TO CUT AND CONNECT AS IT IS. IN CASE OF OTHERS, CUT THE OUTLET PIPE AND CONNECT TO THE CONNECTING PIPE. REFER TO FIGURE ABOVE.
5. REDUCER MAY BE REQUIRED (FIELD SUPPLY) IF JOINT DIAMETER DOES NOT SUIT ON THE TRIPLE PIPING SIDE.
6. INSULATORS ARE NECESSARY (FIELD SUPPLY) FOR THE TRIPLE PIPING SIDE.
7. THIS SPACE IS A SPACE TO KEEP A TOP PANEL WHEN SERVICING.
8. INSTALL IT IN A SPACE WHICH CAN BE SECURED DOWNWARDS SLOPE OF 1/100 OR MORE.
9. IT IS A SPACE FOR REMOVING THE DRAIN PAN.
10. THIS IS A SPACE FOR REMOVING A TOP PANEL WHEN SERVICING.

NUMBER	PART NAME	REMARK
1	OUTDOOR UNIT SUCTION GAS PIPE CONNECTION PORT (NOTE 5, 6)	Ø34.9mm BRAZING CONNECTION
2	OUTDOOR UNIT HP/LP GAS PIPE CONNECTION PORT (NOTE 5, 6)	Ø28.6mm BRAZING CONNECTION
3	OUTDOOR UNIT LIQUID PIPE CONNECTION PORT (NOTE 5, 6)	Ø19.1mm BRAZING CONNECTION
4	INDOOR UNIT GAS PIPE CONNECTION PORT (NOTE 4)	Ø15.9mm BRAZING CONNECTION
5	INDOOR UNIT GAS PIPE CONNECTION PORT (NOTE 4)	Ø12.7mm BRAZING CONNECTION
6	INDOOR UNIT LIQUID PIPE CONNECTION PORT (NOTE 4)	Ø9.5mm BRAZING CONNECTION
7	INDOOR UNIT LIQUID PIPE CONNECTION PORT (NOTE 4)	Ø6.4mm BRAZING CONNECTION
8	ELECTRIC BOX (NOTE 1)	
9	SUSPENSION BRACKETS	M8~M10
10	GROUNDING TERMINAL	M4
11	SOCKET FOR DRAIN	VP20 (O.D.Ø26mm / I.D.Ø20mm)
12	INSPECTION HOLE	

3D106412