# 10 Wiring diagrams

## 10 - 1 Wiring Diagrams - Three Phase

RZAG-MY1, RZASG-MY1, AZAS-MY1

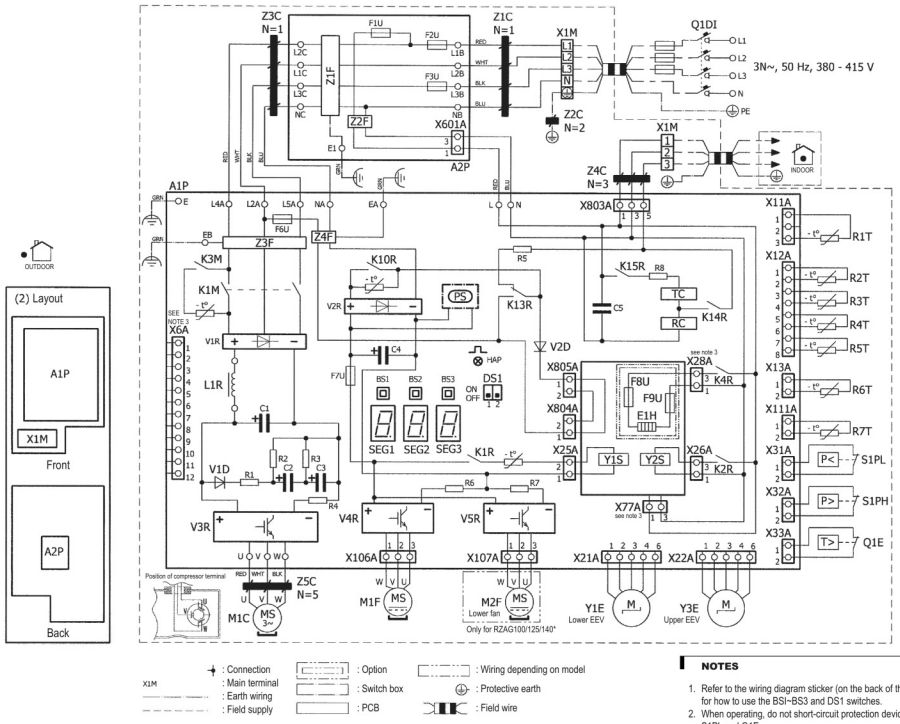


**NOTES**

1. Refer to the wiring diagram sticker (on the back of the front plate) for how to use the BSI~BS3 and DS1 switches.
2. When operating, do not short-circuit protection device(s) S1PH, S1PL and Q1E.
3. Refer to the combination table and the option manual for how to connect the wiring to X6A, X28A and X77A.
4. Colours: BLK: Black, RED: Red, BLU: Blue, WHT: White, GRN: Green.

**LEGEND**

# : Field supply
* Optional

| Part n° | | Description |
|---|---|---|
| A1P | | Printed circuit board (main) |
| A2P | | Printed circuit board (noise filter) |
| BS1~BS3 (A1P) | | Push-button switch |
| C1~C5 (A1P) | | Capacitor |
| DS1 (A1P) | | Dipswitch |
| E1H | * | Bottom plate heater |
| F1U (A2P) | | Fuse T 6,3 A 250 V |
| F2U, F3U (A2P) | | Fuse T 30 A 500 V |
| F6U (A1P) | | Fuse T 6,3 A 250 V |
| F7U (A1P) | | Fuse T 5 A 250 V |
| F8U, F9U | | Fuse T 1 A 250 V |
| HAP (A1P) | | Light-emitting diode (service monitor is green) |
| K1M, K3M (A1P) | | Magnetic contactor |
| K1R (A1P) | | Magnetic relay (Y1S) |
| K2R (A1P) | | Magnetic relay (Y2S) |
| K4R (A1P) | | Magnetic relay (E1H) |
| K10R K13R~K15R (A1P) | | Magnetic relay |
| L1R | | Reactor |
| M1C | | Compressor motor |
| M1F, M2F | | Fan motor |
| PS (A1P) | | Switching power supply |
| Q1DI | | Earth leakage circuit breaker (30mA) |
| Q1E | | Overload protection |
| R1~R8 (A1P) | | Resistor |
| R1T | | Thermistor (air) |
| R2T | | Thermistor (discharge) |
| R3T | | Thermistor (suction) |
| R4T | | Thermistor (heat exchanger) |
| R5T | | Thermistor (heat exchanger middle) |
| R6T | | Thermistor (liquid) |
| R7T | | Thermistor (fin) |
| RC (A1P) | | Signal receiver circuit |
| S1PH | | High pressure switch |
| S1PL | | Low pressure switch |
| SEG1~SEG3 (A1P) | | 7-segment display |
| TC (A1P) | | Signal transmission circuit |
| V1D, V2D (A1P) | | Diode |
| V1R, V2R (A1P) | | Diode module |
| V3R~V5R (A1P) | | IGBT power module |
| X1M | | Terminal strip |
| Y1E, Y3E | | Electronic expansion valve |
| Y1S, Y2S | | Solenoid valve (4-way valve) |
| Z1C~Z5C | | Noise filter (ferrite core) |
| Z1F~Z4F (A1P~A2P) | | Noise filter |
| L*A, L*B, NA, NBE*, U, V, W, X*A (A1P, A2P) | | Connector |

4D109448

10