10 Wiring diagrams

10 - 1 Wiring Diagrams - Single Phase

RZAG100-140MV1, RZASG125-140MV1, AZAS125-140MV1

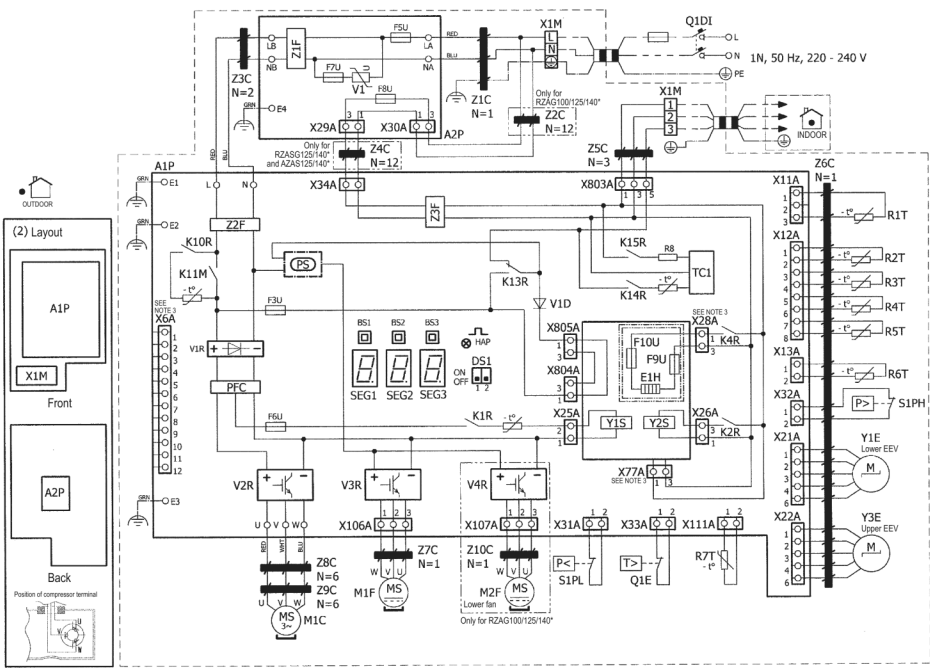

: Connection
X1M : Main terminal
: Earth wiring
: Field supply
: Several wiring possibilities
: Protective earth
: Field wire
: Wiring dependong on model
: option
: switch box
: PCB

NOTES

1. Refer to the wiring diagram sticker (on the back of the front plate) for how to use the BSI~BS3 and DS1 switches.
2. When operating, do not short-circuit protection device(s) S1PH, S1PL and Q1E.
3. Refer to the combination table and the option manual for how to connect the wiring to X6A, X28A and X77A.
4. Colours: BLK: Black, RED: Red, BLU: Blue, WHT: White, GRN: Green.

LEGEND

: Field supply
* Optional

Part n°		Description
A1P		Printed circuit board (main)
A2P		Printed circuit board (noise filter)
BS1~3 (A1P)		Push-button switch
DS1 (A1P)		Dipswitch
E1~3 (A1~2P)		Connector
E1H	*	Bottom plate heater
F3U (A1P)		Fuse T 6,3 A 250 V
F5U (A2P)		Fuse T 56 A 250 V
F6U (A1P)		Fuse T 5 A 250 V
F7U (A2P)		Fuse T 6,3 A 250 V
F8U (A2P)		Fuse F 6,3 A 250 V
F9~10U	*	Fuse F 1 A 250 V
HAP (A1P)		Light-emitting diode (service monitor is green)
K1R (A1P)		Magnetic relay (Y1S)
K2R (A1P)		Magnetic relay (Y2S)
K4R (A1P)		Magnetic relay (E1H)
K13~15R, K10R (A1P)		Magnetic relay
K11M (A1P)		Magnetic contactor
L* (A1~2P)		Connector
M1C		Compressor motor
M1~2F		Fan motor
PFC (A1P)		Power factor correction
PS (A1P)		Switching power supply
Q1DI		Earth leakage circuit breaker (30mA)
Q1E		Overload protection
R1T		Thermistor (air)
R2T		Thermistor (discharge)
R3T		Thermistor (suction)
R4T		Thermistor (heat exchanger)
R5T		Thermistor (heat exchanger middle)
R6T		Thermistor (liquid)
R7T		Thermistor (fin)
R8 (A1P)		Resistor
S1PH		High pressure switch
S1PL		Low pressure switch
SEG1~3 (A1P)		7-segment display
TC1 (A1P)		Signal transceiver circuit
U, V, W (A1P)		Connector
V1 (A2P)		Varistor
V1D (A1P)		Diode
V*R (A1P)		Diode module
X*A (A1~2P)		Connector
X1M		Terminal strip
Y1E, Y3E		Electronic expansion valve
Y1~2S		Solenoid valve (4-way valve)
Z*C		Noise filter (ferrite core)
Z*F (A1~2P)		Noise filter

4D109863