10 Wiring diagrams

10 - 1 Wiring Diagrams - Single Phase

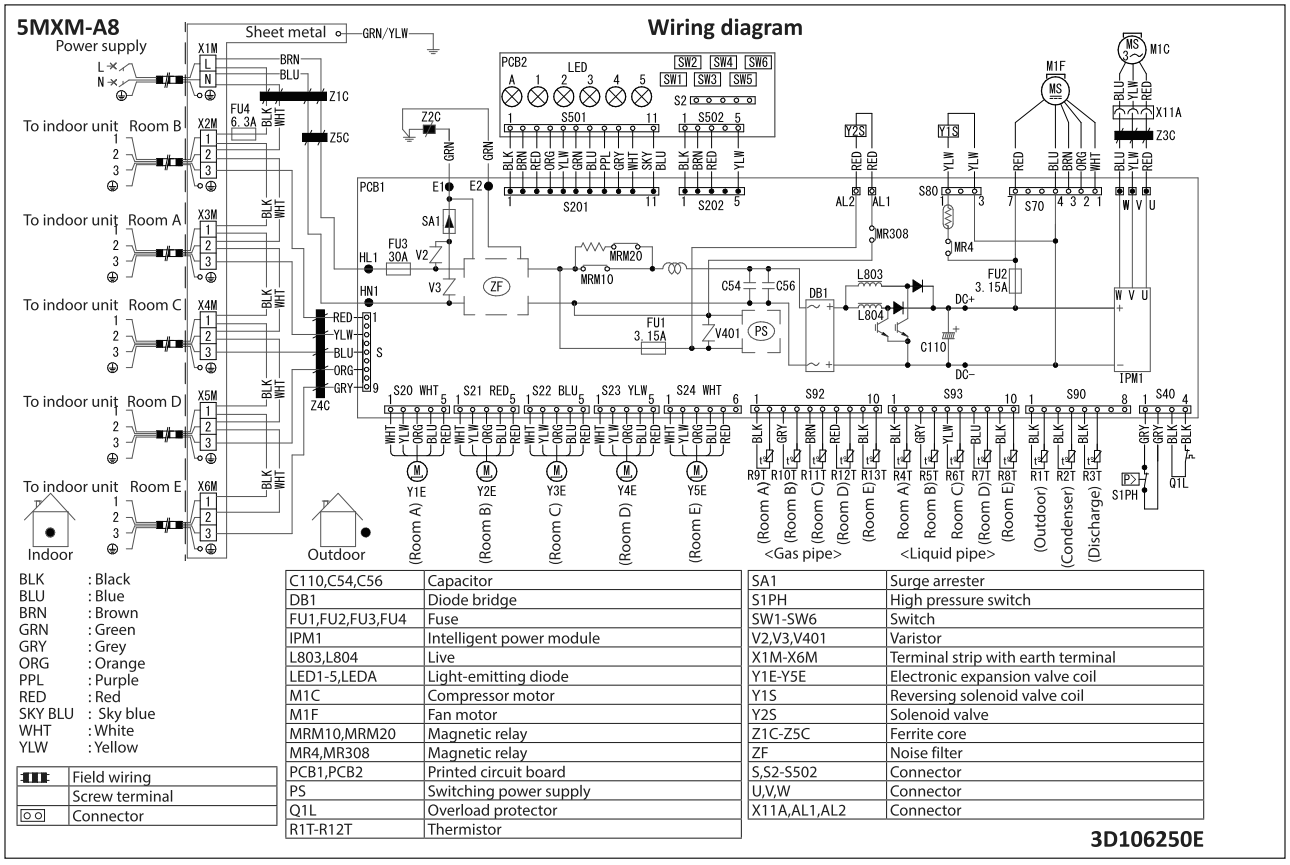

BLK : Black
BLU : Blue
BRN : Brown
GRN : Green
GRY : Grey
ORG : Orange
PPL : Purple
RED : Red
SKY BLU : Sky blue
WHT : White
YLW : Yellow

	Field wiring
	Screw terminal
	Connector

C110,C54,C56	Capacitor
DB1	Diode bridge
FU1,FU2,FU3,FU4	Fuse
IPM1	Intelligent power module
L803,L804	Live
LED1-5,LEDA	Light-emitting diode
M1C	Compressor motor
M1F	Fan motor
MRM10,MRM20	Magnetic relay
MR4,MR308	Magnetic relay
PCB1,PCB2	Printed circuit board
PS	Switching power supply
Q1L	Overload protector
R1T-R12T	Thermistor

SA1	Surge arrester
S1PH	High pressure switch
SW1-SW6	Switch
V2,V3,V401	Varistor
X1M-X6M	Terminal strip with earth terminal
Y1E-Y5E	Electronic expansion valve coil
Y1S	Reversing solenoid valve coil
Y2S	Solenoid valve
Z1C-Z5C	Ferrite core
ZF	Noise filter
S,S2-S502	Connector
U,V,W	Connector
X11A,AL1,AL2	Connector