10 Wiring diagrams

10 - 1 Wiring Diagrams - Three Phase

4MWXM-A **Wiring diagram**

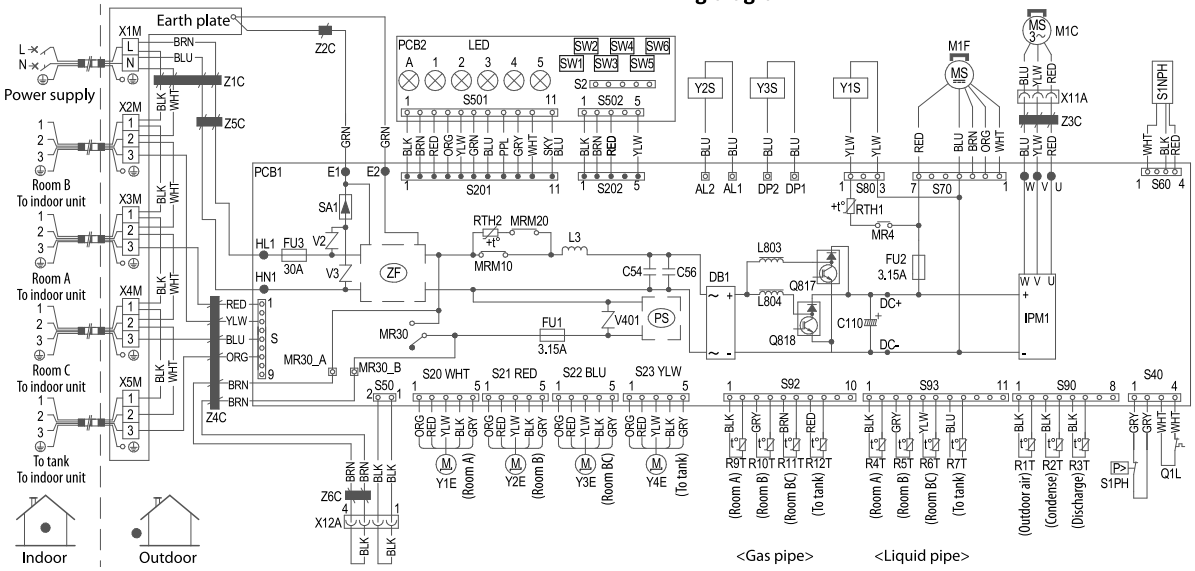

AL1, AL2	Connector
C110, C54, C56	Capacitor
DB1	Diode bridge
DP1, DP2	Connector
E1, E2	Earth connection (soldered)
FU1, FU2, FU3	Fuse
HL1, HN1	Power supply connection (soldered)
IPM1	Intelligent power module
L3	Inductor
L803, L804	Reactor
LED 1-5, LED A	Light-emitting diode

M1C	Compressor motor
M1F	Fan motor
MR30_A, MR30_B	Connector
MRM10, MRM20, MR4, MR30	Magnetic relay
PCB1, PCB2	Printed circuit board
PS	Switching power supply
Q817, Q818	IGBT Module
Q1L	Overload protector
R1T-R12T	Thermistor
RTH1, RTH2	Positive thermistor
S, S2-S502	Connector

S1NPH	High pressure sensor
S1PH	High pressure switch
SA1	Surge arrester
SW1-SW6	Switch
U,V,W	Compressor connection (soldered)
V2, V3, V401	Varistor
X11A, X12A	Connector
X1M-X5	Terminal strip with earth terminal
Y1E-Y4E	Electronic expansion valve coil
Y1S - Y3S	Solenoid valve coil
Z1C-Z6C	Ferrite core
ZF	Noise filter

Field wiring
Screw terminal
Connector

BLK : black
BLU : blue
BRN : brown
GRN : green
GRY : grey
ORG : orange
PPL : purple
RED : red

3D135807