6 Dimensional drawings

6 - 1 Dimensional Drawings

2MXM40A

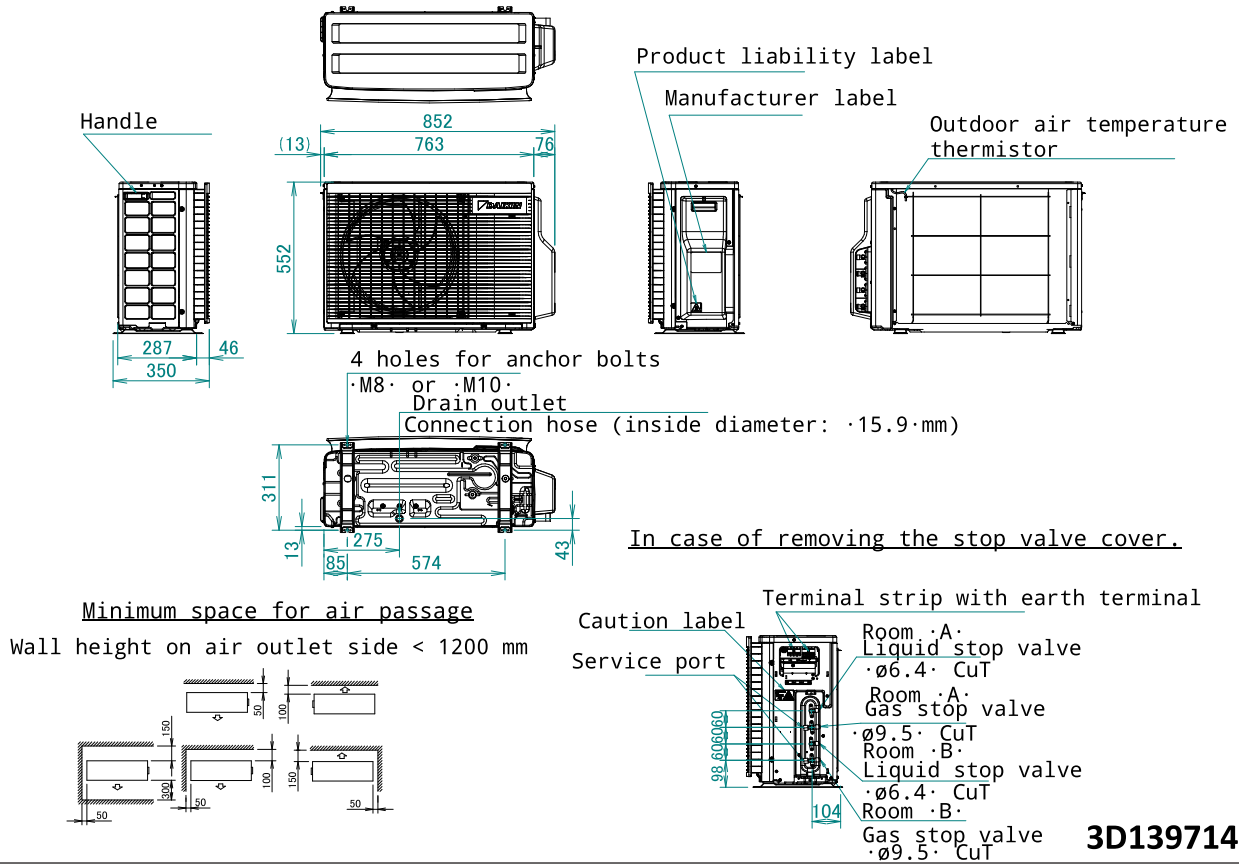
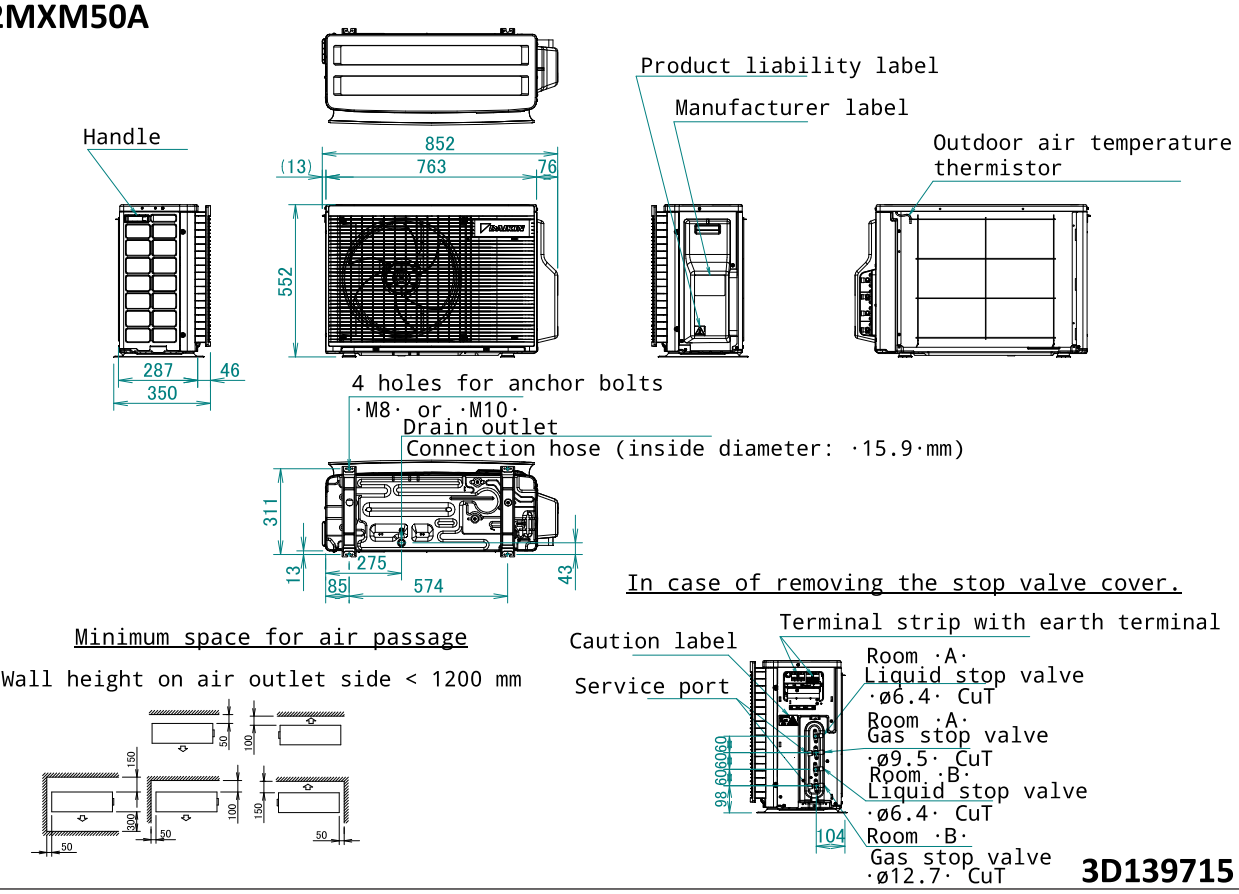
2MXM50A