# 9 Wiring diagrams

## 9 - 1 Wiring Diagrams - Single Phase



**2MXF40A**

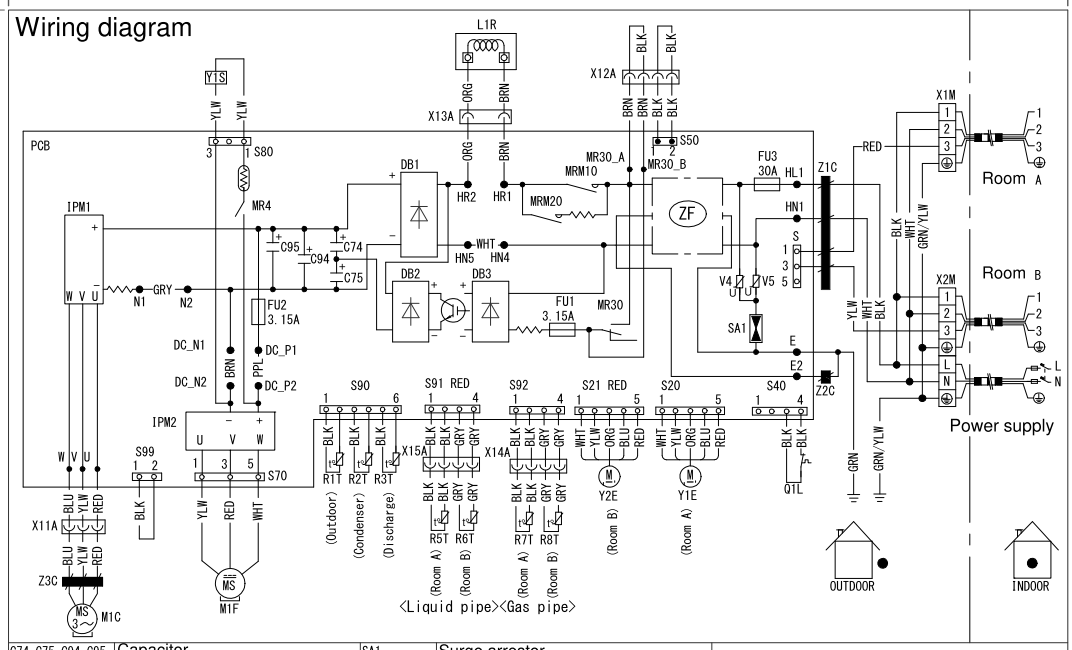


| | | | | | |
|---|---|---|---|---|---|
| C74, C75, C94, C95 | Capacitor | SA1 | Surge arrestor | | |
| DB1, DB2, DB3 | Diode bridge | | | | |
| FU1, FU2, FU3 | Fuse | V4, V5 | Varistor | | |
| IPM1 | Intelligent power module | X1M-X2M | Terminal strip with earth terminal | Field wiring | |
| L1R | Reactor | Y1E-Y2E | Electronic expansion valve coil | Screw terminal | |
| M1C | Compressor motor | Y1S | Reversing solenoid valve coil | Connector | |
| M1F | Fan motor | ZF | Noise filter | WHT: white | GRY: grey |
| MRM10, MRM20 | Magnetic relay | Z1C-Z3C | Ferrite core | BLK: black | ORG: orange |
| MR4, MR30 | Magnetic relay | S2-S502 | Connector | BLU: blue | RED: red |
| PCB | Printed circuit board | X11A-X15A | Connector | BRN: brown | YLW: yellow |
| Q1L | Overload protector | S99 | Heating-to-cooling changeover | GRN: green | |
| R1T-R8T | Thermistor | | | PPL: purple | |

**3D114689A**

**2MXF50A**

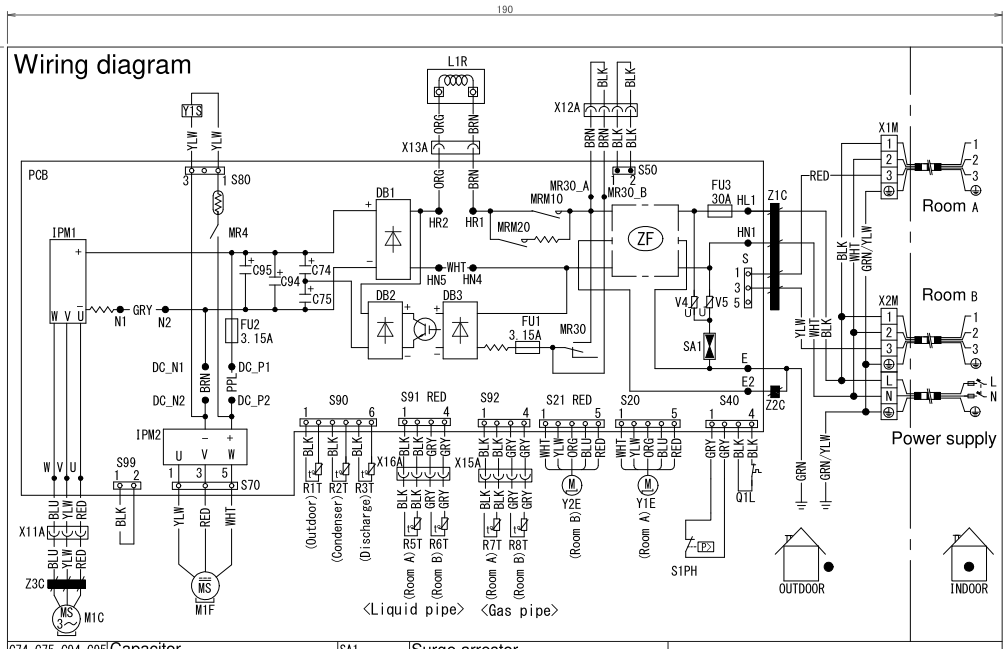


| | | | | | |
|---|---|---|---|---|---|
| C74, C75, C94, C95 | Capacitor | SA1 | Surge arrestor | | |
| DB1, DB2, DB3 | Diode bridge | S1PH | High pressure switch | | |
| FU1, FU2, FU3 | Fuse | V4, V5 | Varistor | | |
| IPM1 | Intelligent power module | X1M-X2M | Terminal strip with earth terminal | Field wiring | |
| L1R | Reactor | Y1E-Y2E | Electronic expansion valve coil | Screw terminal | |
| M1C | Compressor motor | Y1S | Reversing solenoid valve coil | Connector | |
| M1F | Fan motor | ZF | Noise filter | WHT: white | GRY: grey |
| MRM10, MRM20 | Magnetic relay | Z1C-Z3C | Ferrite core | BLK: black | ORG: orange |
| MR4, MR30 | Magnetic relay | S2-S502 | Connector | BLU: blue | RED: red |
| PCB | Printed circuit board | X11A-X16A | Connector | BRN: brown | YLW: yellow |
| Q1L | Overload protector | S99 | Heating-to-cooling changeover | GRN: green | |
| R1T-R8T | Thermistor | | | PPL: purple | |

**3D114690B**